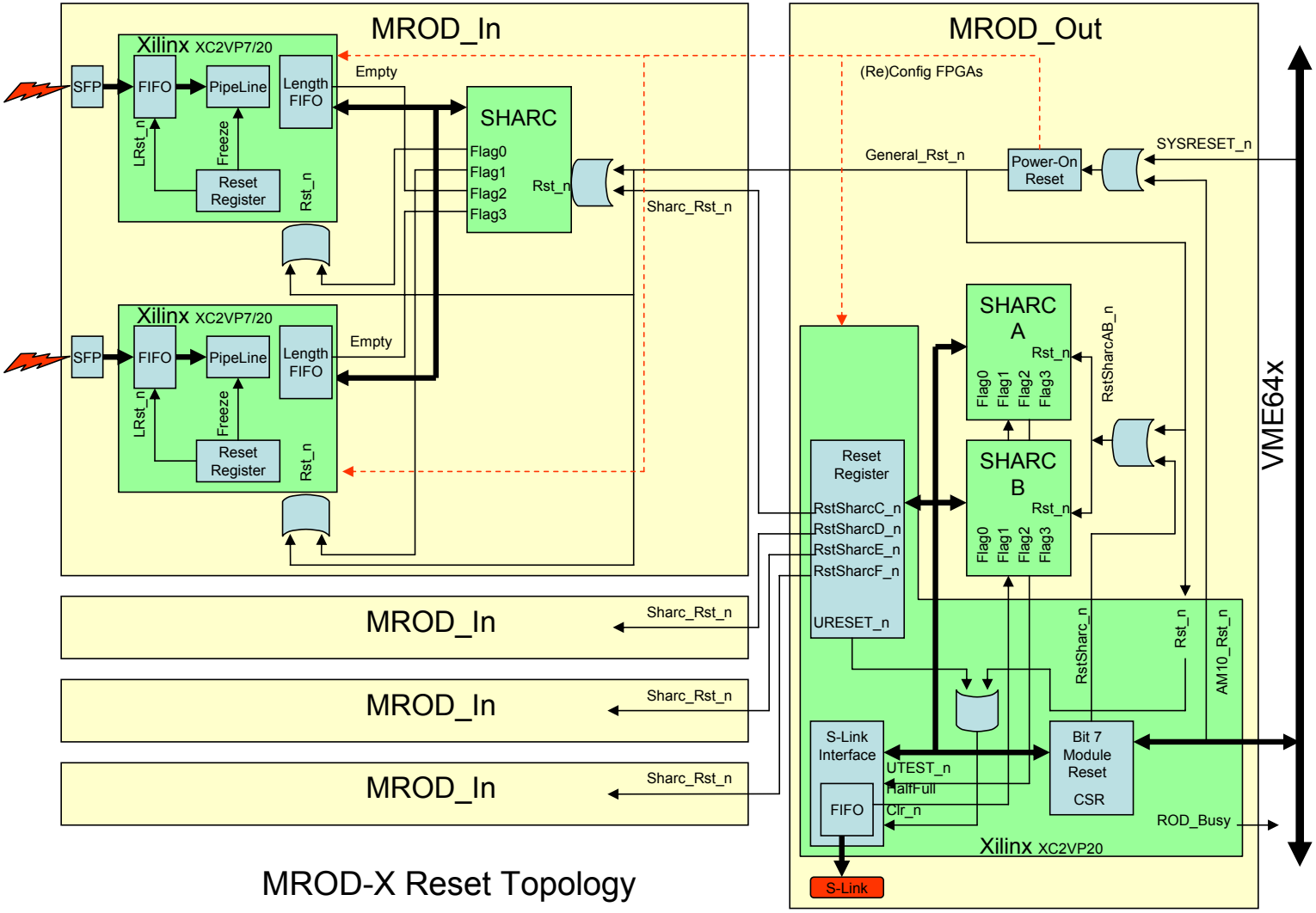

MROD-X Reset Topology