DWG. NO.	SH.	REV

REVISIONS

REV	DESCRIPTION	DATE	APPROVED

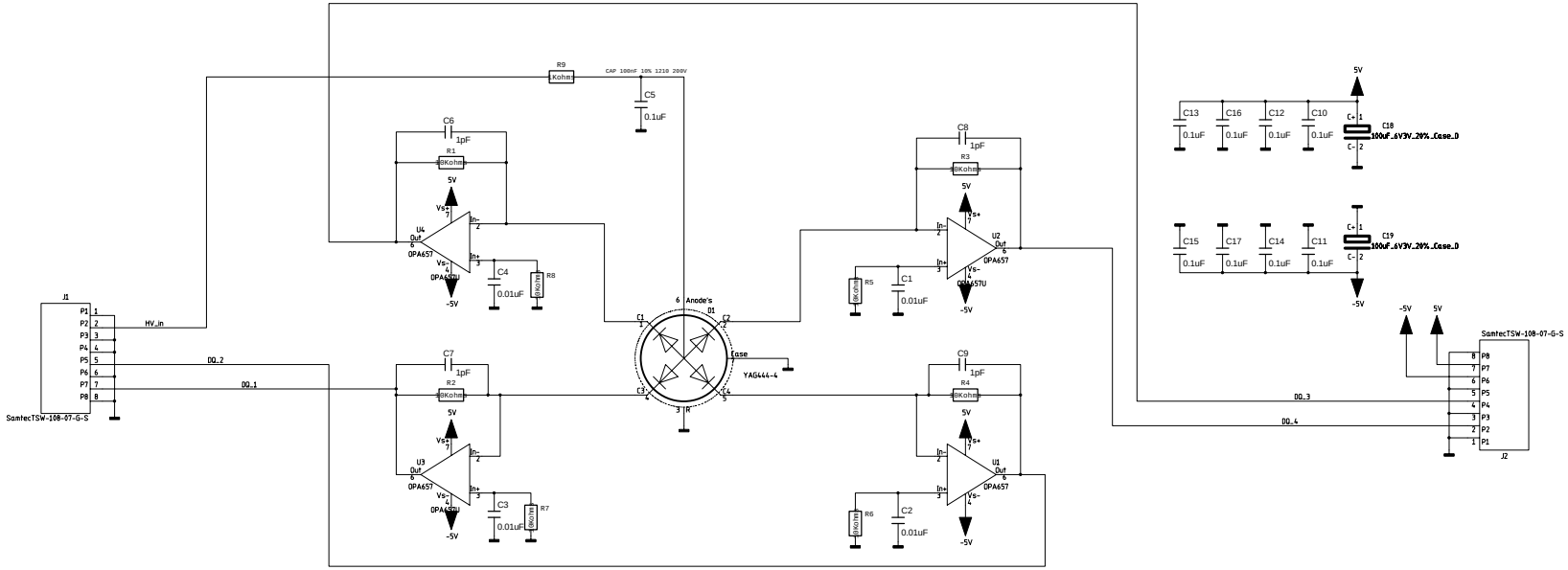

CONTRACT NO.		Virgo FrontBoard
APPROVALS	DATE	Henk Groenstege Jan David Schipper
DRAWN		
CHECKED		
ISSUED		SIZE D / FSCM NO. / DWG. NO. / REV
		SCALE / SHEET

H:BND; V:4LA