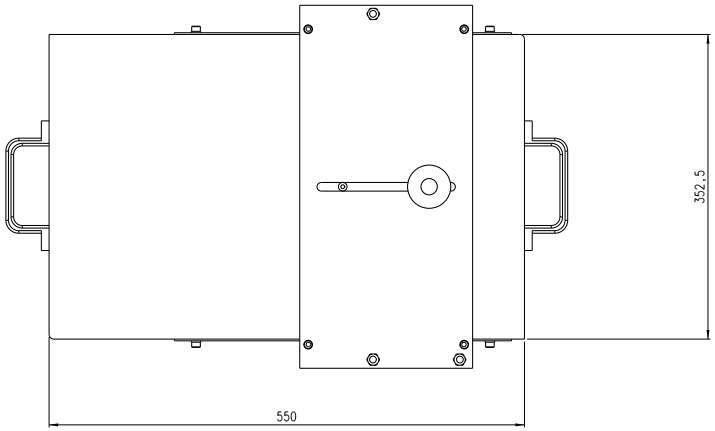

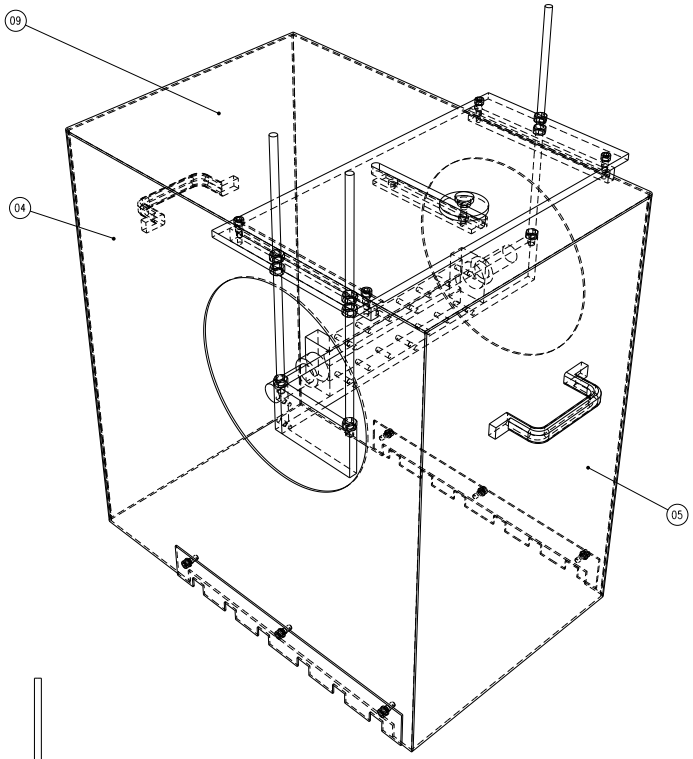

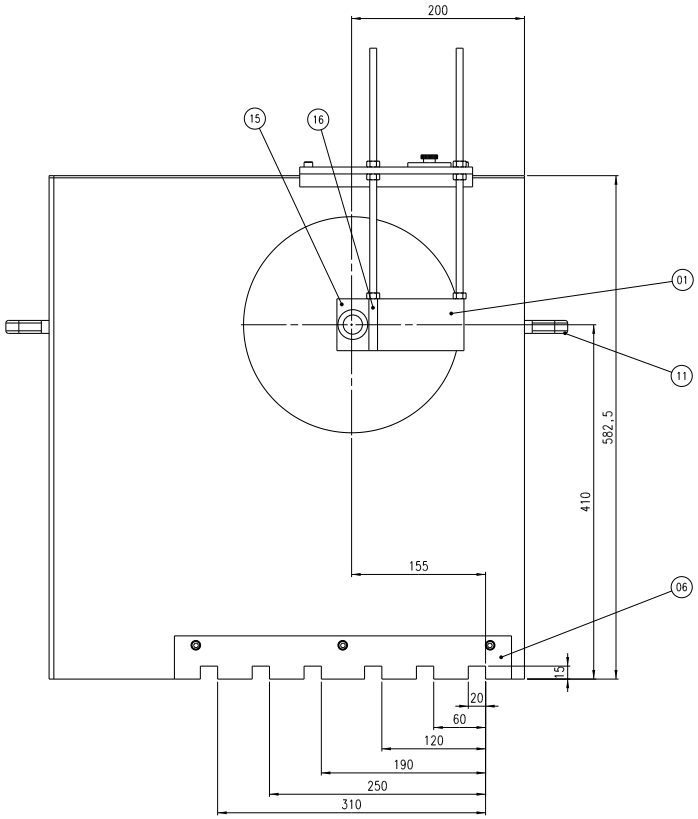

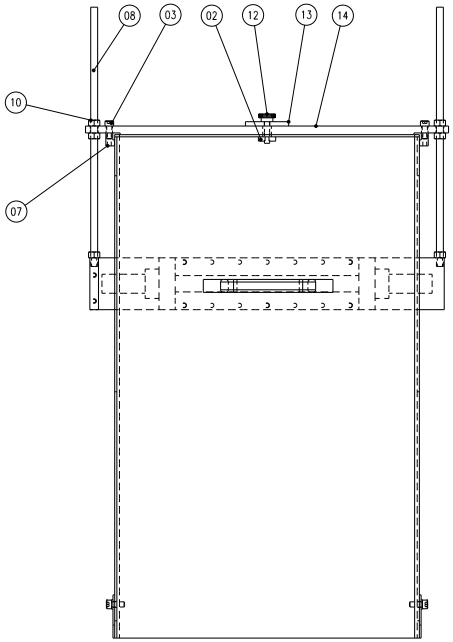

NOTES:

PARTS No. 04, 05 AND 09 WELDING TOGETHER
GLUE OR WELD PART No. 02 ON PART No. 09

PART NO.	NUMBER	TITLE	MATERIAL	SIZE/NOTE	I.D. NO./NORM
16	1	MOUNTING PLATE RF GEN.			LHCB-TVT0102
15	1	RF GENERATOR			FRANS KROES
14	1	MOVING PLATE			LHCB-TVT0101
13	1	RING			LHCB-TVT0104
12	1	HAND SCREW		M6x25	
11	2	HANDLE			PRAXIS STORE
10	9	NUT + RING		M8	
09	1	TOPLATE			LHCB-TVT0209
08	3	STUD		M8x300	
07	2	SIDE BLOCK			LHCB-TVT0207
06	2	RAILPLATE			LHCB-TVT0103
05	1	OUTSIDE PLATE 2			LHCB-TVT0205
04	1	OUTSIDE PLATE 1			LHCB-TVT0204
03	10	INBUS BOLD + RING		M6x15	
02	1	PLATE 1			LHCB-TVT0202
01	1	BLOCK 1			LHCB-TVT0201

Project: LHCB VERTEX DETECTOR

Title: RF TEST BOX

Revision	Date	Name
A		
B		
C		

Scale: 1:3 | Drawn: M.J. Kraan | Dim. in mm

Date: august 2001 | Checked:

General tolerances unless otherwise stated according to	Geometrical tolerances unless otherwise stated according to	Roughness unless otherwise stated according to
ISO-2768-mK-E	ISO-8015-E	DIN 1302

NIKHEF
NATIONAL INSTITUTE FOR NUCLEAR PHYSICS AND HIGH ENERGY PHYSICS
P.O.41882,1009 DB Amsterdam,The Netherlands
Visitors: Kruislaan 409,1098 SJ,Amsterdam
tel:+31-(0)20-5922000
fax:+31-(0)20-5925155

Size: A1 | Identification No.: LHCB-TVT02

Sheet No: X | Number of sheets: X

This drawing may not be used for commercial purposes without written authorisation.