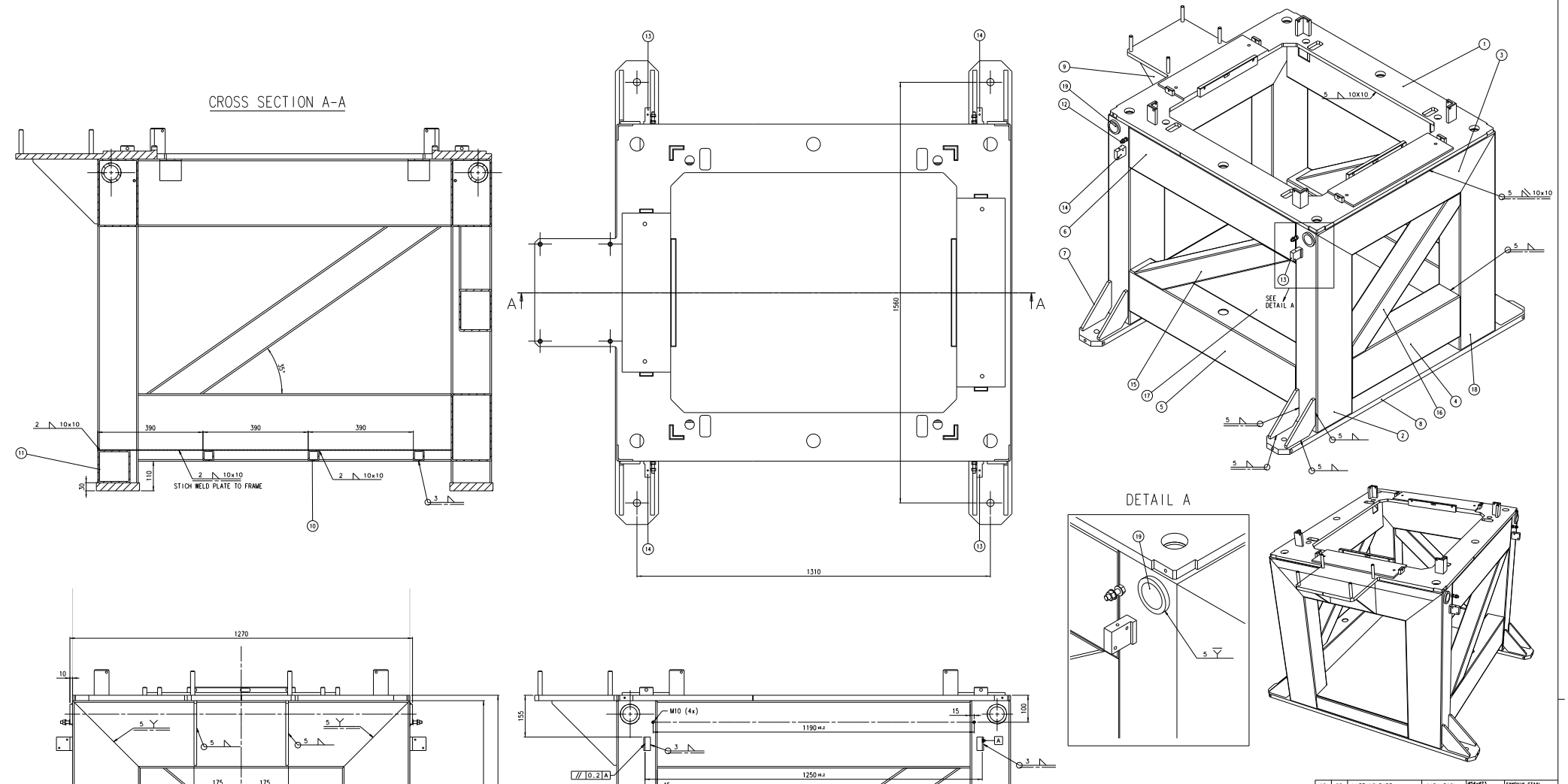

PART NO.	NUMBER	TITLE	MATERIAL	SIZE/NOTE	I.D. NO./NORM
19	02	LIFTING PIPE	AISI 316L	ø54x⌀73 length = 1270	SANDVIK STAAL TST-3865-2, S-SCH160
18	02	PIPE	AISI 304		TVM 2101
17	01	FLOOR PLATE	AISI 304		TVM 2121
16	01	CROSS PIPE SHORT	AISI 304		TVM 2124
15	02	CROSS PIPE LONG	AISI 304		TVM 2123
14	02	CABLE BLOCK 2	AISI 304		TVM 2108
13	02	CABLE BLOCK 1	AISI 304		TVM 2107
12	04	STUD	AISI 304	M10x50	
11	01	FRONT FLOOR PIPE	AISI 304	120x120x5 length = 750	
10	03	FLOOR PIPE	AISI 304	40x40x4 length = 950	
09	02	STIFFNER	AISI 304		TVM 2117
08	02	FOOT STRIP	AISI 304		TVM 2112
07	08	CORNERPLATE	AISI 304		TVM 2114
06	02	HORIZONTAL PIPE TOP	AISI 304		TVM 2105
05	02	HORIZONTAL PIPE BOTTOM	AISI 304		TVM 2104
04	01	SHORT BOTTOM PIPE	AISI 304	250x150x8 length = 750	
03	02	HORIZONTAL PIPE	AISI 304		TVM 2102
02	02	PIPE	AISI 304		TVM 2111
01	01	BASE PLATE STAND	AISI 304		TVM 0102

Project: LHCb VErtex LOcator

Title: FRAME STAND

Revision	Date	Name
A	31/03/03	MJ Kraan
B		
C		
D		

Scale: 1:5 | Drawn: M Doets | Dim. in mm

Date: 10-2-2003 | Checked:

General tolerances unless otherwise stated according to ISO-2768-mK-E | Geometrical tolerances unless otherwise stated according to ISO-8015-E | Roughness unless otherwise stated according to DIN 1302

CERN LABEL

NIKHEF
NATIONAL INSTITUTE FOR NUCLEAR PHYSICS, AND HIGH ENERGY PHYSICS
P.O.41882, 1009 DB Amsterdam, The Netherlands

Size: A0 | Identification No.: TVM 23

Sheet No: X | Number of sheets: X

This drawing may not be used for commercial purposes without written authorisation.