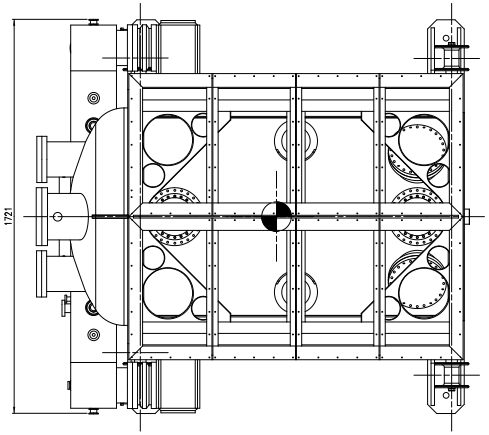

TOTAL WEIGHT = APPROX. 3000 Kg

Documents 'Lifting Point VELO STAND':

TIS/GS-MS Safety Study Report: SSR 382299
CERN EDMS No: 382302
CERN Document No: LHCB-V-RPT-00001

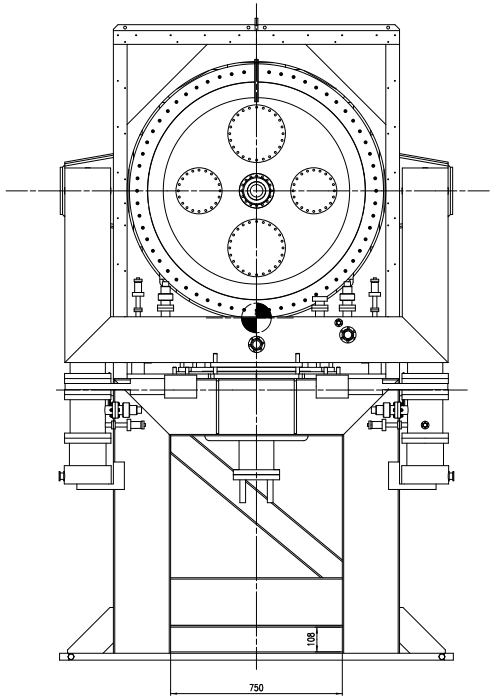

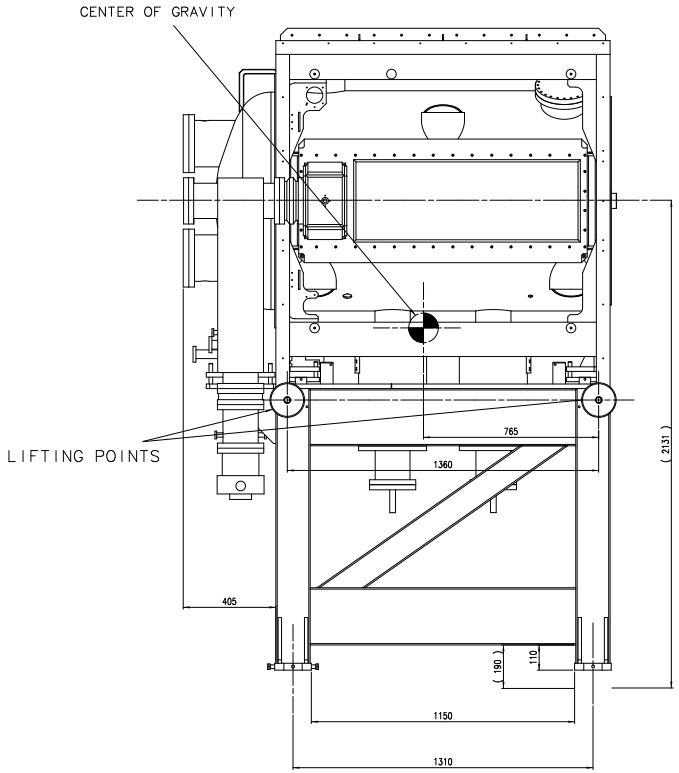

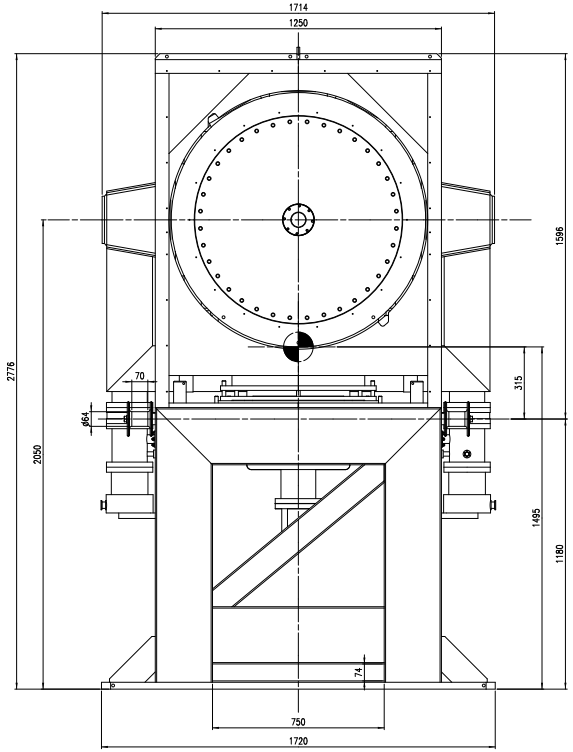

Project: LHCb VErtex LOcator	Revision	Date	Name
Title: VELO INSTALLATION SITUATION	A		
Scale: 1:8	B		
Date: july 2005	C		
Drawn: M.J. Kraan	D		
Checked: M Doets	Dim. in mm		
CERN LABEL	General tolerances unless otherwise stated according to ISO-2768-mK-E	Quantities and dimensions without tolerance stated according to ISO-8015-E	Roughness values unless otherwise stated according to DIN 1302
NIKHEF NATIONAL INSTITUTE FOR NUCLEAR PHYSICS AND HIGH ENERGY PHYSICS P.O.-BOX 41882, 1009 DB Amsterdam, The Netherlands	Size A0	Identification No.: TVL0001	
	Sheet No: X	Number of sheets: X	

This drawing may not be used for commercial purposes without written authorisation.