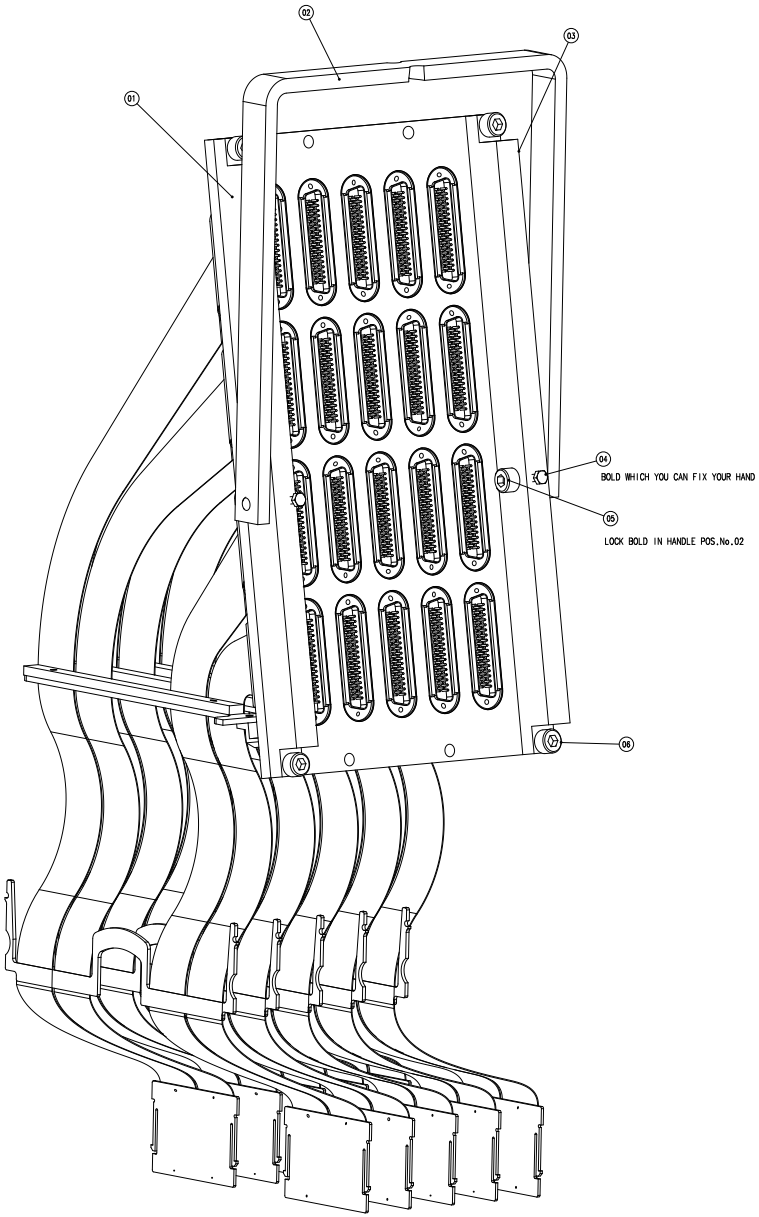

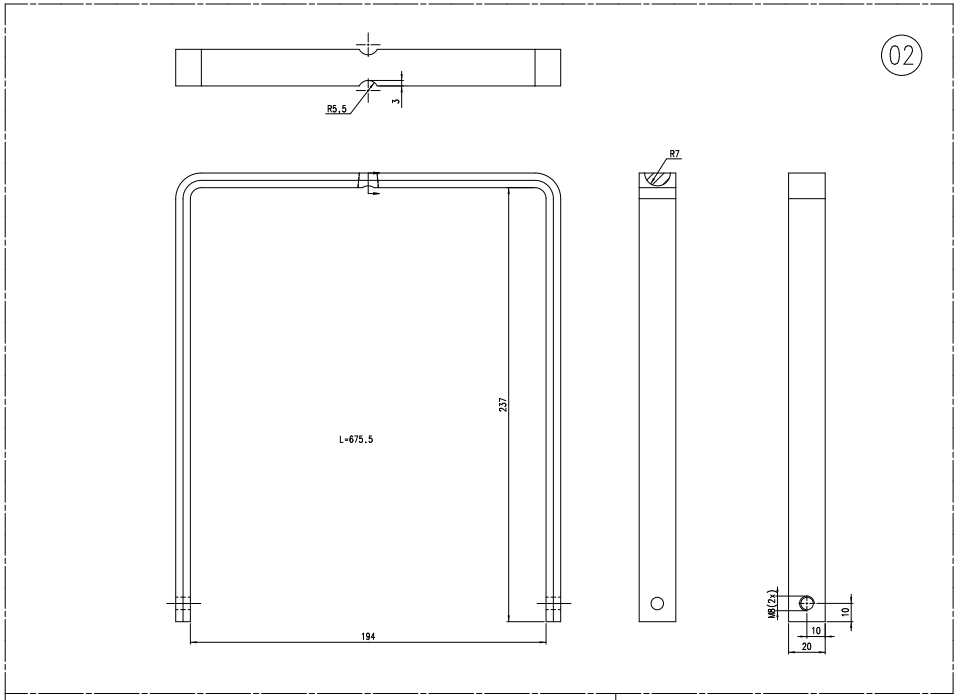

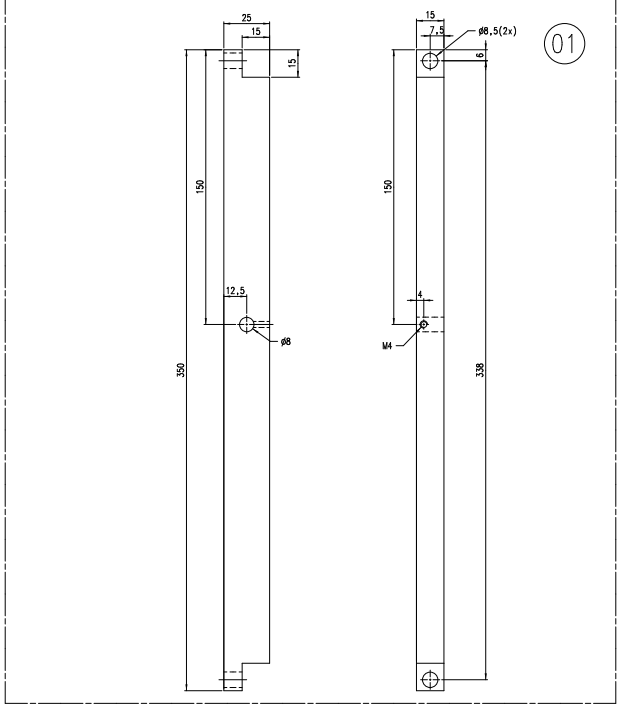

PART NO.	NUMBER	TITLE	MATERIAL	SIZE/NOTE	I.D. NO./NORM
06	4	Bold	AISI	M8x1 L=16	
05	2	Bold	AISI	M8x25	
04	2	Bold	AISI	M4x20	
03	1	Bar mirror	Al		
02	1	handle	Al		
01	1	Bar	Al		

Project: LHCb VErtex LOcator

Title: Feedthroughflange Installation tool

Scale: 1:1 | Drawn: MJ kroon | Date: june 2006 | Checked: | Dim. in mm

Revision	Date	Name
A		
B		
C		
D		

General tolerances unless otherwise stated according to ISO-2768-mK-E | Quantities of tolerances unless otherwise stated according to ISO-8015-E | Roughness unless otherwise stated according to DIN 1302

CERN LABEL

NIKHEF
NATIONAL INSTITUTE FOR NUCLEAR PHYSICS, AND HIGH ENERGY PHYSICS
P.O.41882, 1009 DB Amsterdam, The Netherlands

Size: A0 | Identification No.: TVK30

Sheet No: X | Number of sheets: X

This drawing may not be used for commercial purposes without written authorisation.