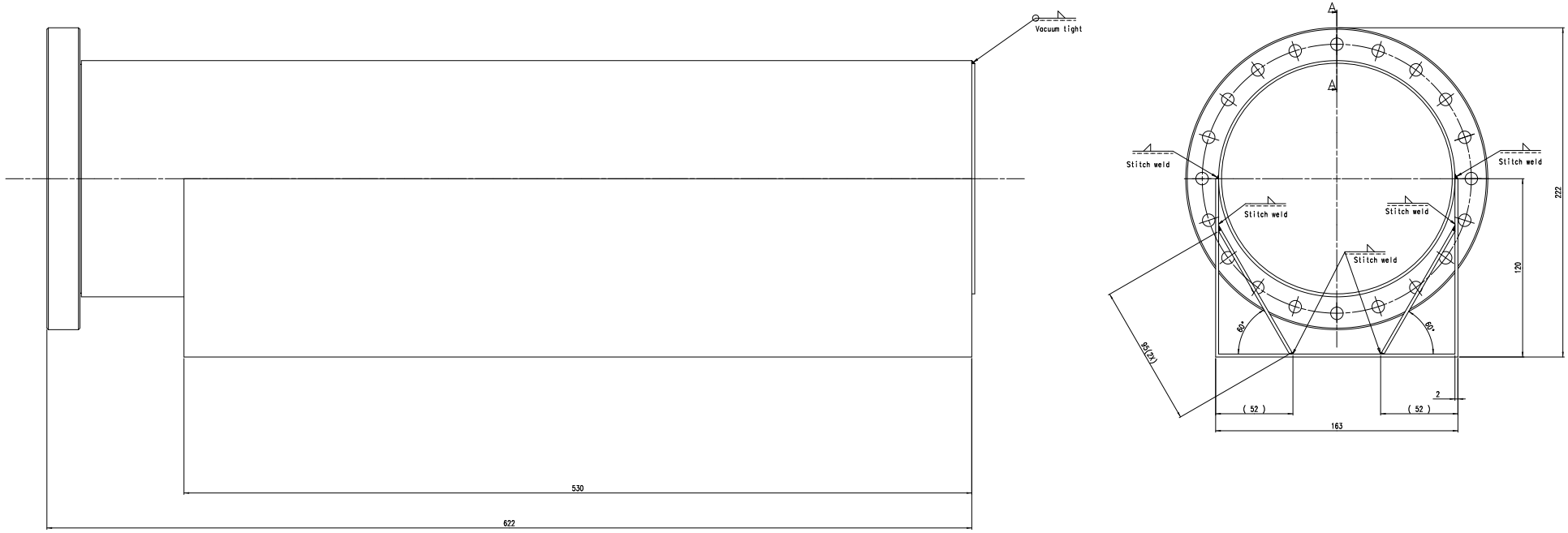

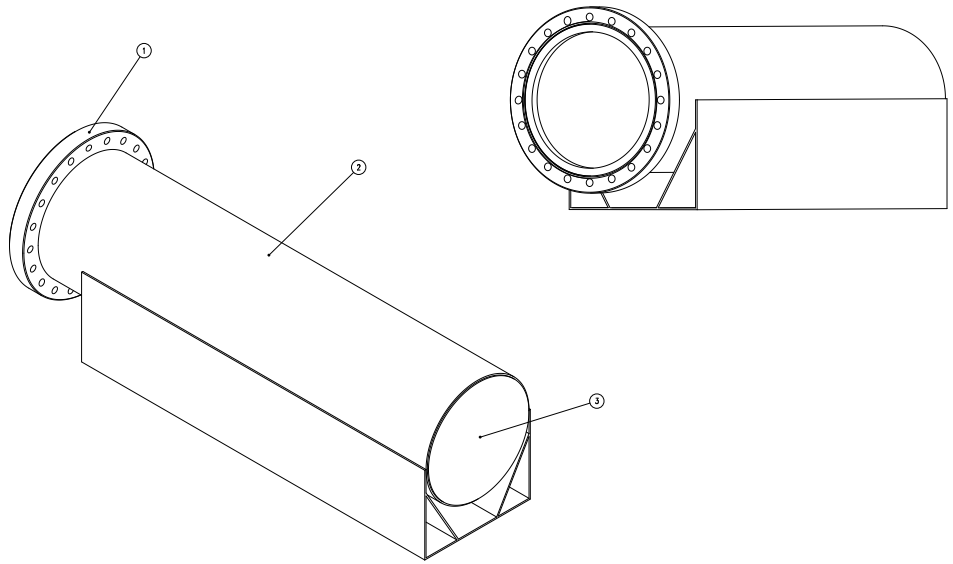

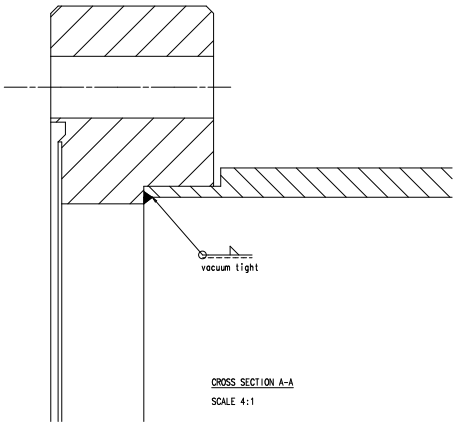

CROSS SECTION A-A

SCALE 4:1

PART NO.	NUMBER	TITLE	MATERIAL	SIZE/NOTE	I.D. NO./NORM
3	1	End cap			TVK1504
2	1	Tube			TVK1505
1	1	Conflat flange	AISI	CF150 (BORED)	Hositrad

Project: LHCb VErtex LOcator

Title: VACUUM CHAMBER
Oven vacuum chamber

Scale: 1:2 | Drawn: L v Diepen | Date: 11-08-'04 | Checked: MJ Kroon | Dim. in mm

Revision	Date	Name
A		
B		
C		
D		

General tolerances unless otherwise stated according to ISO-2768-mK-E | Quantitat tolerances unless otherwise stated according to ISO-8015-E | Roughness unless otherwise stated according to DIN 1302

CERN LABEL

NIKHEF
NATIONAL INSTITUTE FOR NUCLEAR PHYSICS, AND HIGH ENERGY PHYSICS
P.O.41882,1009 DB Amsterdam,The Netherlands

Size: A0 | Identification No.: TVK1501

Sheet No: X | Number of sheets: X

This drawing may not be used for commercial purposes without written authorisation.