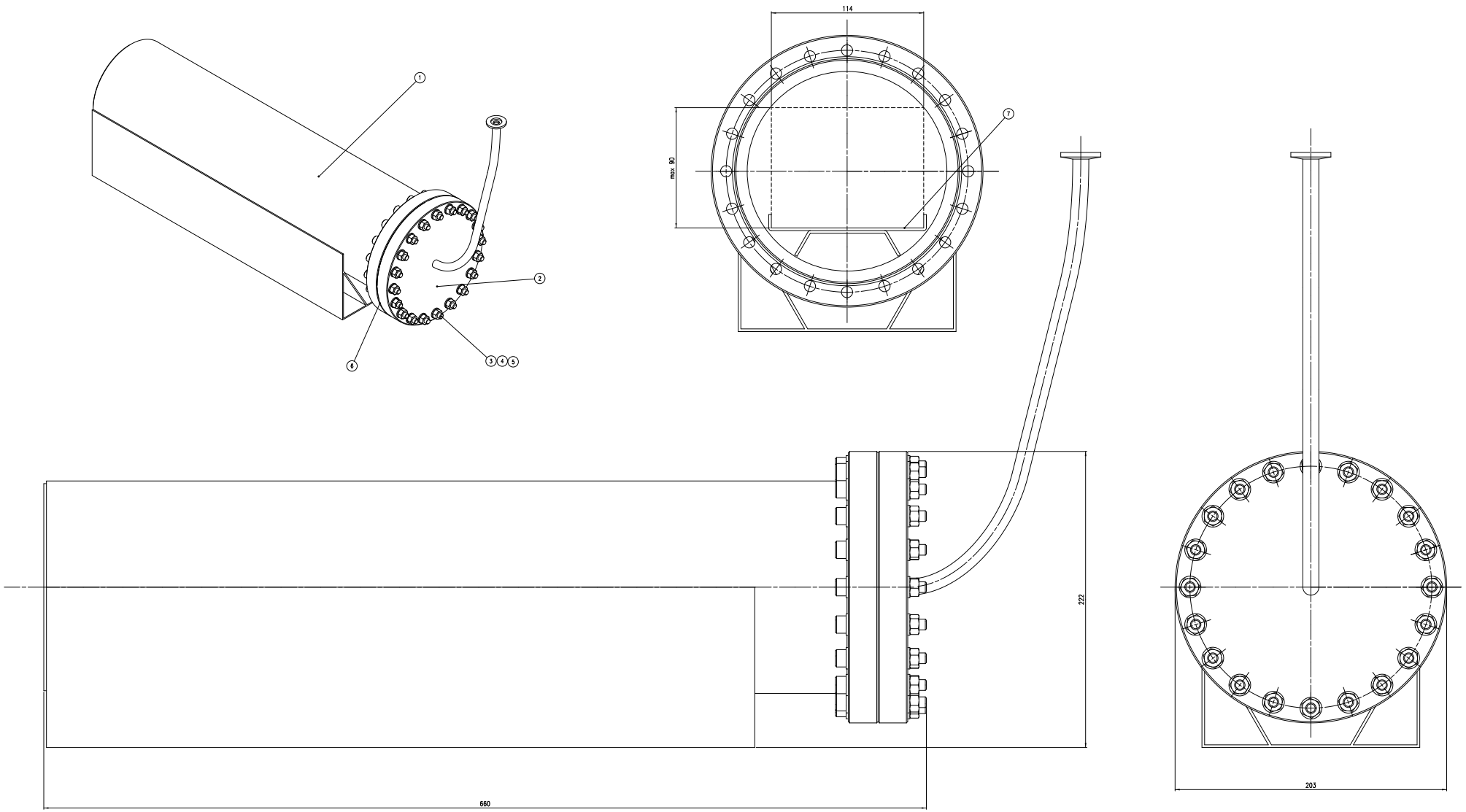

PART NO.	NUMBER	TITLE	MATERIAL	SIZE/NOTE	I.D. NO./NORM
07	1	table			TVK19
06	1	Gasket	Cu	CF 150	
05	40	washer	AISI coated with Ag		M8
04	20	bolt	AISI coated with Ag		M8
03	20	Hex socket head	AISI coated with Ag		M8x6
02	1	Conflat flange assy			TVK1502
01	1	Vacuum tube			TVK1501

Project: LHCb VErtex LOcator

Title: OVEN VACUUM CHAMBER MELTING COOLING BLOCKS

Scale: 1:1 | Drawn: L v Diepen | Date: 11-08-'04 | Checked: MJ Kroon | Dim. in mm

Revision	Date	Name
A		
B		
C		
D		

General tolerances unless otherwise stated according to ISO-2768-mK-E	Geometrical tolerances unless otherwise stated according to ISO-8015-E	Roughness unless otherwise stated according to DIN 1302

CERN LABEL

NIKHEF
NATIONAL INSTITUTE FOR NUCLEAR PHYSICS, AND HIGH ENERGY PHYSICS
P.O.BOX 1009 DB Amsterdam, The Netherlands

Size: A0 | Identification No.: TVK15

Sheet No: X | Number of sheets: X

This drawing may not be used for commercial purposes without written authorisation.