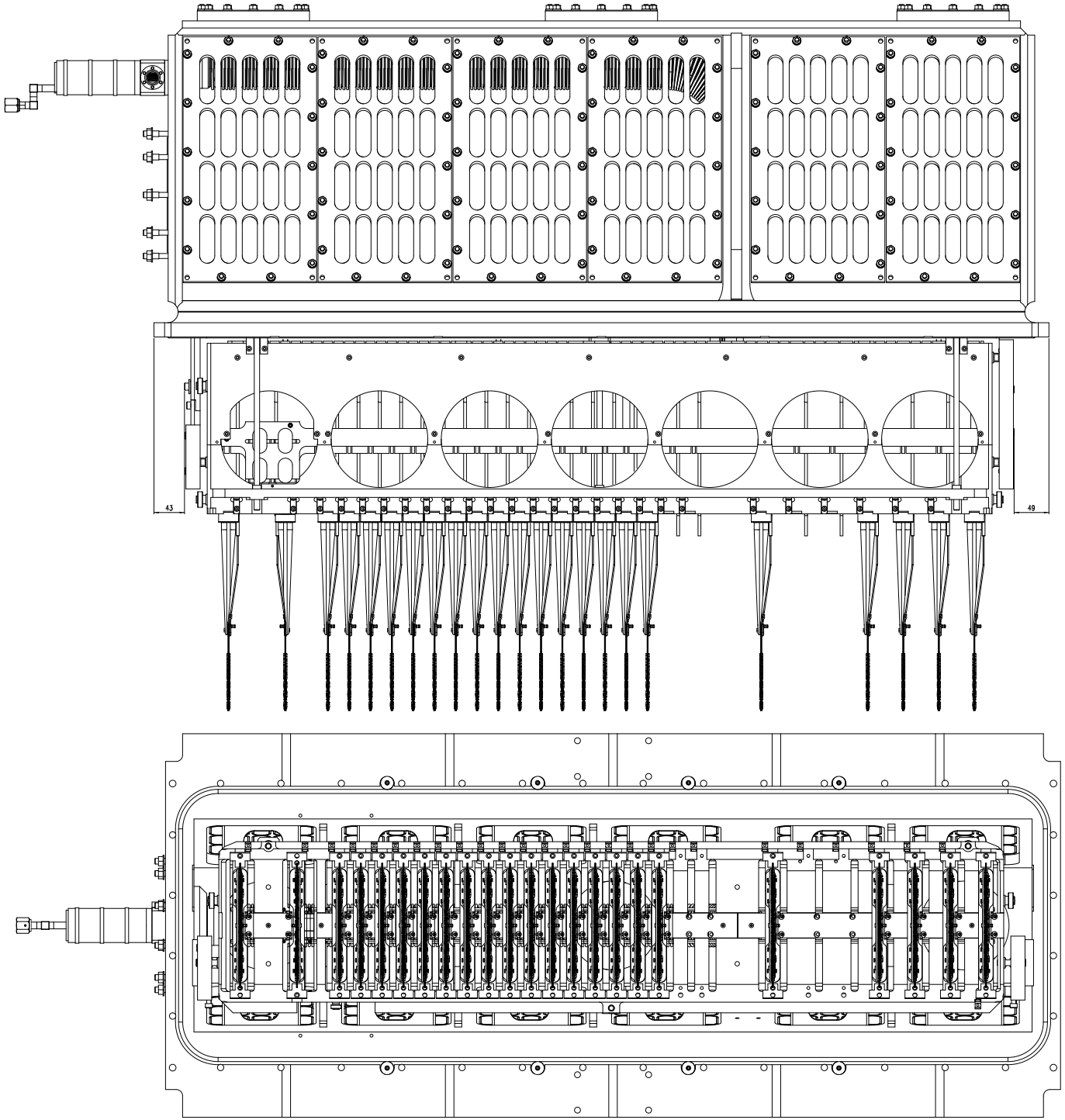

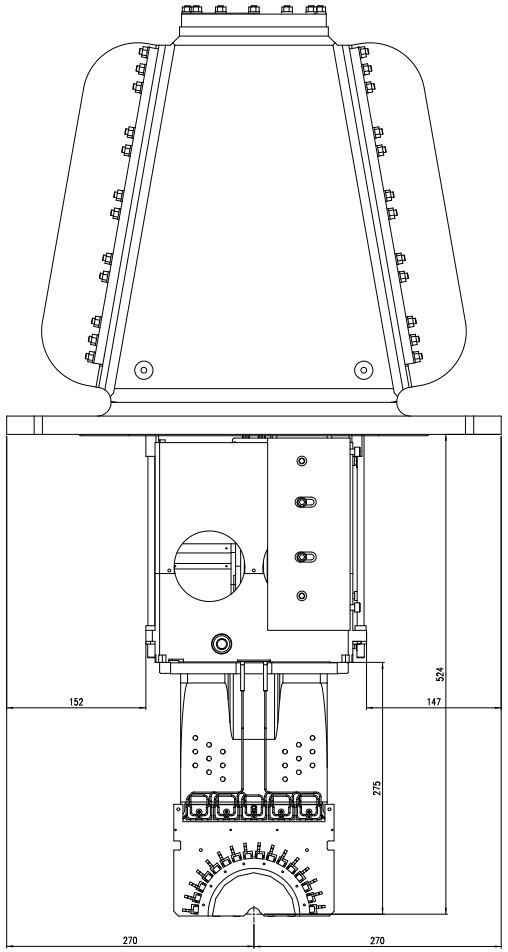

Project: LHCb VErtex LOcator	Revision		Date	Name
Title: RIGHT DETECTOR MOUNTED ON TEMPORARILY SUPPORT		A		
		B		
		C		
		D		
Scale: 1:2	Drawn: MJ Kroon			
Date: july 2005	Checked:	Dim. in mm		
General tolerances unless otherwise stated according to ISO-2768-mK-E	Quantities and dimensions without tolerances stated according to ISO-8015-E	Roughness values unless otherwise stated according to DIN 1302		
NIKHEF NATIONAL INSTITUTE FOR NUCLEAR PHYSICS AND HIGH ENERGY PHYSICS P.O.-BOX 41882, 1009 DB Amsterdam, The Netherlands	CERN LABEL	Size A0	Identification No.: TVD 0021	
		Sheet No: X	Number of sheets: X	

This drawing may not be used for commercial purposes without written authorisation.