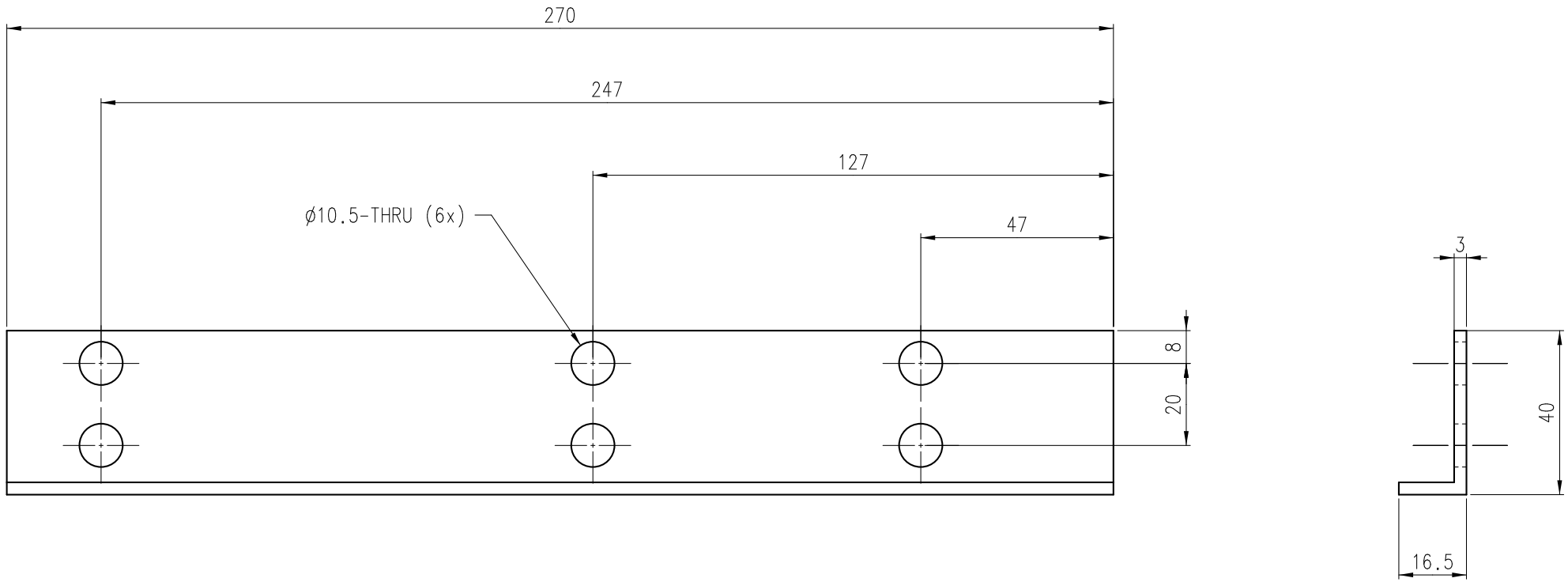

01			Stainless Steel AISI 304 L		
PART NO.	NUM-BER	TITLE	MATERIAL	SIZE/NOTE	I.D. NO./NORM

Project: LHCb VErtex LOcator /CO2 Cooling Rack

Title: Freon Tube Support Frame Profile 1

Scale: 1:1 | Drawn: A.K.

Date: 12-09-'06 | Checked:

Dim. in mm

Revision	Date	Name
A		
B		
C		
D		

General tolerances unless otherwise stated according to	Geometrical tolerances unless otherwise stated according to	Roughness unless otherwise stated according to
ISO-2768-mK-E	ISO-8015-E	DIN 1302

NIKHEF

NATIONAL INSTITUTE FOR NUCLEAR PHYSICS, AND HIGH ENERGY PHYSICS
P.O.41882,1009 DB Amsterdam,The Netherlands

CERN LABEL

Size: A3

Identification No.: TVC 8801

Sheet No: X Number of sheets: X

This drawing may not be used for commercial purposes without written authorisation.