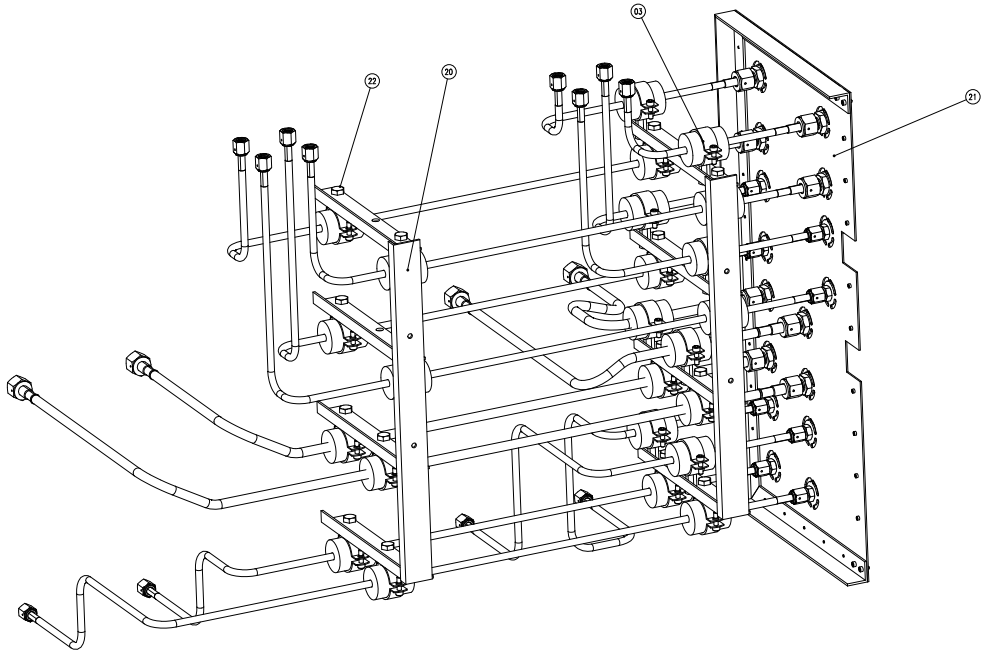

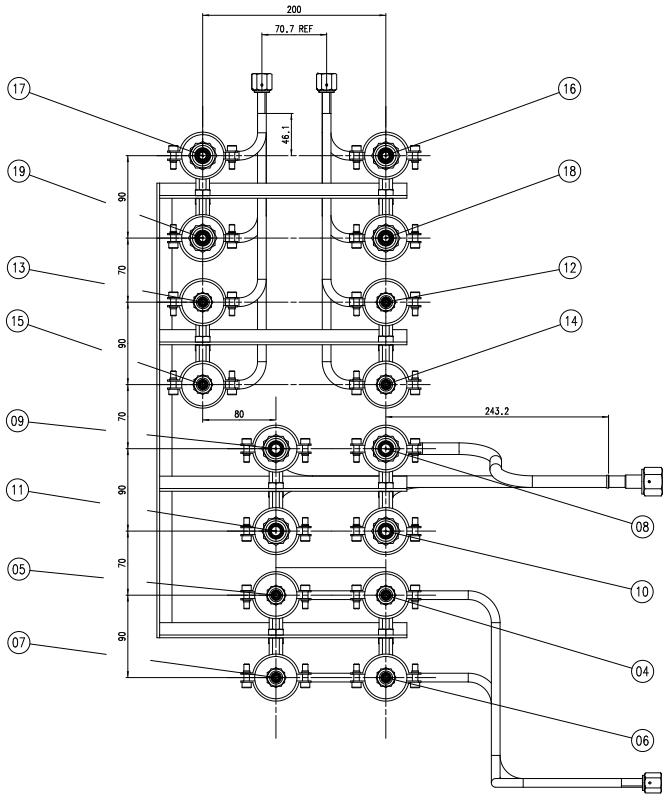

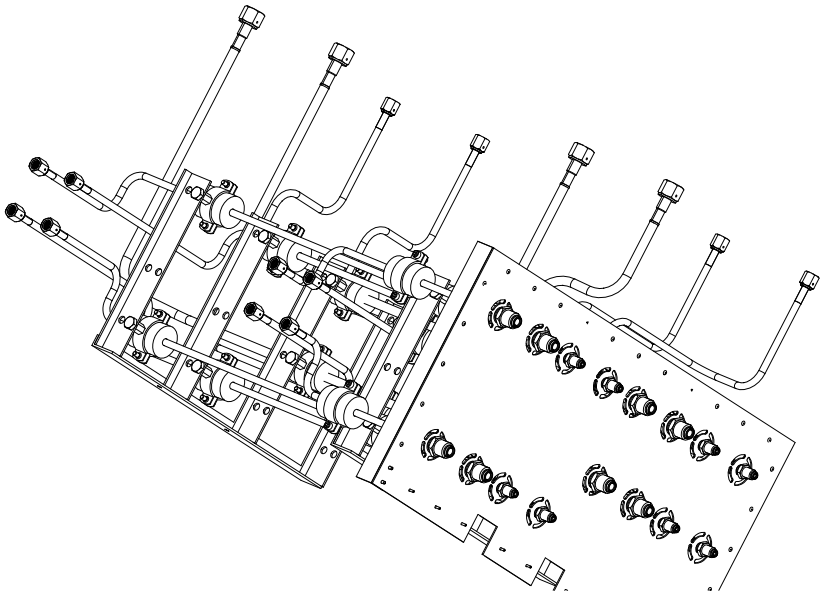

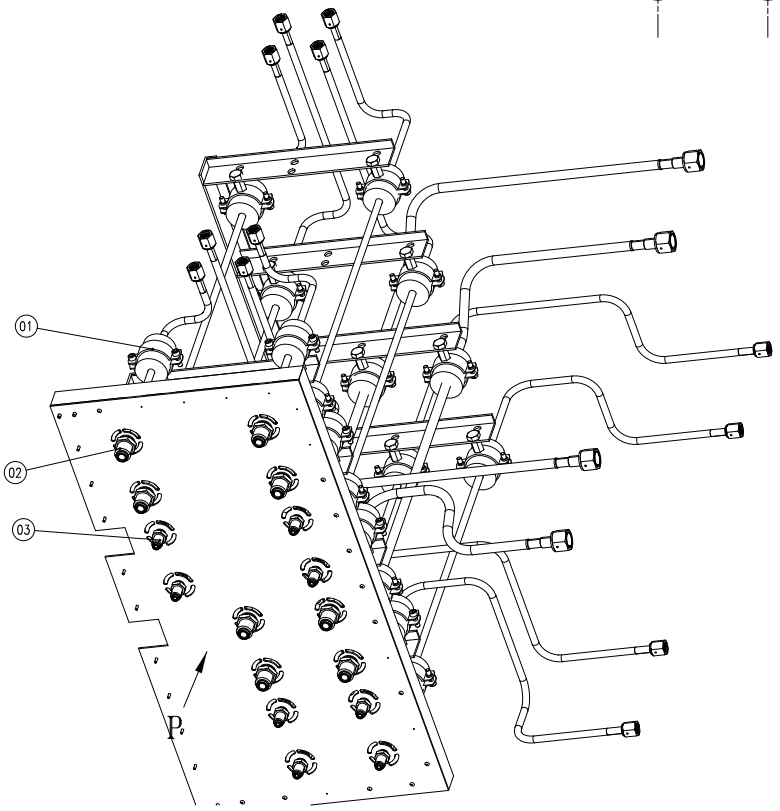

Part	Qty.	Part/Item Name	Material	Drawing nr. / Size / Note	ID / Norm
22	24	Hex Head M10x12		DIN933/M10x12	
21	2	Freon tube support frame assy		TVC88	
20	1	Freon Patch Panel Assy		TVC86	
19	1	SB-Accu rigth vapor out Assy			
18	1	SA-Accu rigth vapor out Assy			
17	1	SB-Accu left vapor out Assy			
16	1	SA-Accu left vapor out Assy			
15	1	SB-Accu right in Assy			
14	1	SA-Accu rigth in Assy			
13	1	SB-Accu left in Assy			
12	1	SA-Accu left in Assy			
11	1	SB-HX105 Vapor out Assy			
10	1	SA-HX105 Vapor out Assy			
9	1	SB-HX103 Vapor out Assy			
8	1	SA-HX103 Vapor out Assy			
7	1	SB-HX105 liquid in Assy			
6	1	SA-HX105 liquid in Assy			
5	1	SB-HX103 liquid in Assy			
4	1	SA-HX103 liquid in Assy			
3	8	SS_B_VCR_61_20105			
2	8	SS_4_VCR_61_20104			
1	24	3/8inx19 tube support assy		TVC77	

Project: LHCb VErtex LOcator / CO2 cooling Rack

Title: Freon Tubes Ass'y

Revision	Date	Name
A	29 sep 06	Verloat
B		
C		
D		

Scale: 1:2 | Drawn: A.K.

Date: 14-09-'06 | Checked: | Dim. in mm

CERN LABEL

NIKHEF
NATIONAL INSTITUTE FOR NUCLEAR PHYSICS, AND HIGH ENERGY PHYSICS
P.O.41882, 1009 DB Amsterdam, The Netherlands

General tolerances unless otherwise stated according to ISO-2768-mK-E	Geometrical tolerances unless otherwise stated according to ISO-8015-E	Roughness unless otherwise stated according to DIN 1302

Size: A0 | Identification No.: TVC 76

Sheet No: 1 | Number of sheets: X

This drawing may not be used for commercial purposes without written authorisation.