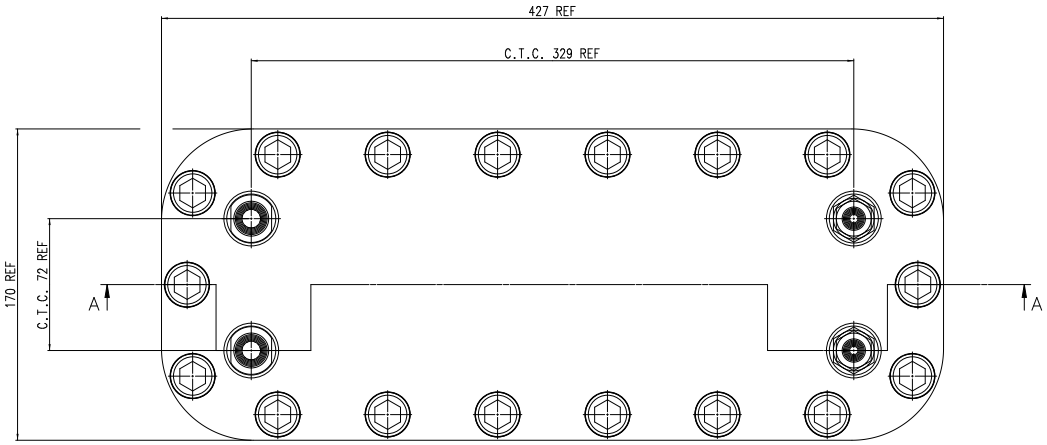

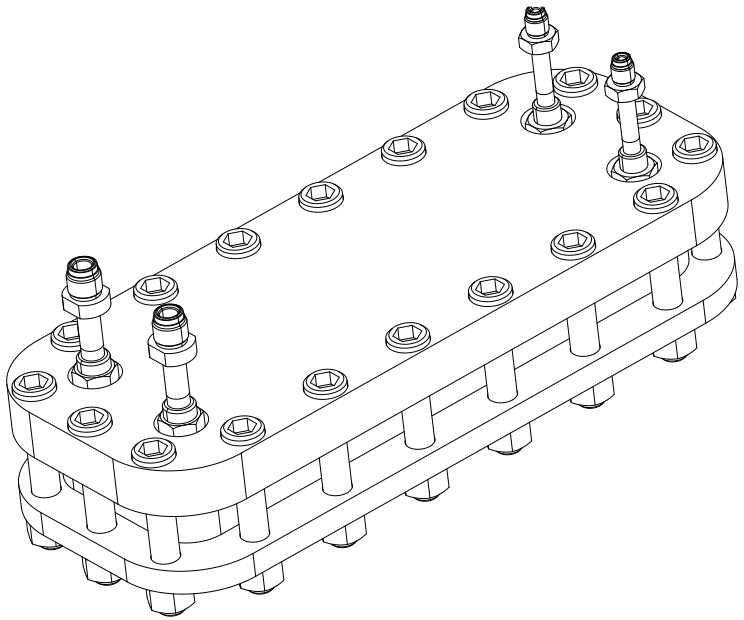

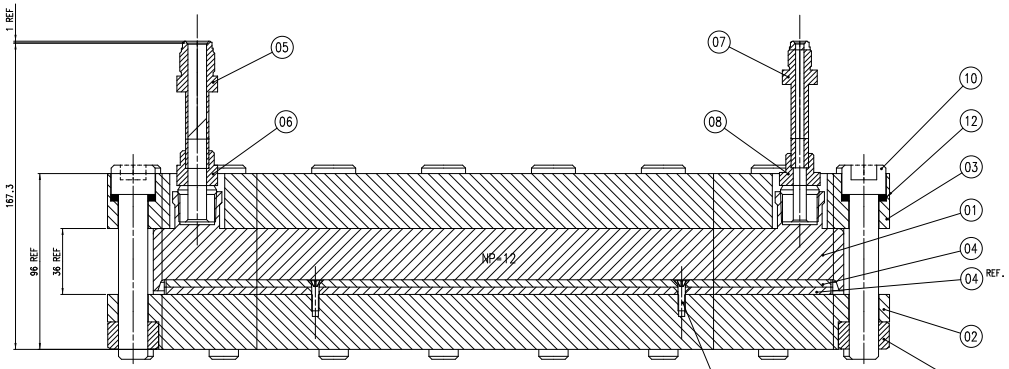

SECTION A-A

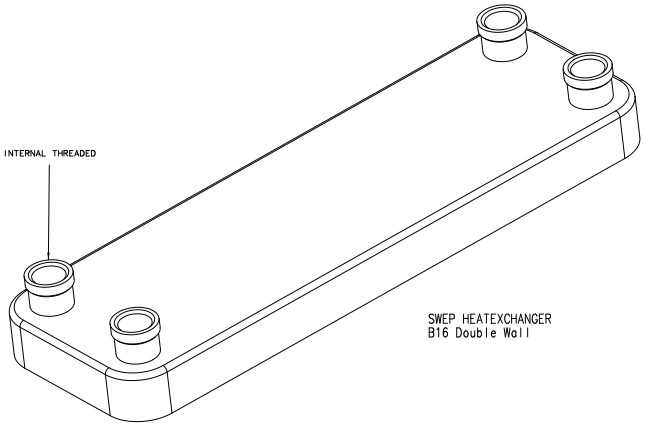

SWEP HEATEXCHANGER
B16 Double Wall

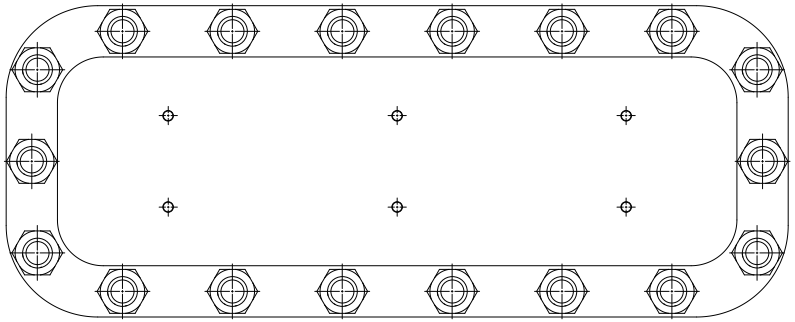

NOTE:

TEST PRESSURE = 170 BAR (ACCORDING CODAP NORM.)

Part	Qty.	Part/Item Name	Material	Drawing nr. / Size / Note	ID / Norm
12	18	SPRING WASHER		DIN 7980-10.2-ST-ZINC PLATED	
11	18	NUT M16			
10	18	CILINDER SOCKET HEAD SCREW		DIN 912-M16x90-8.8-ZINC PLATED	
9	2	Philips Countersunk M4x25		DIN965/M4x16	
8	2	SS-6-TSM-1-8			
7	2	ss-4-vcr-61			
6	2	SS-8-TSM-1-8			
5	2	ss-8-vcr-61			
4	2	Fillingplate		TVC7204	
3	1	Reinforced plate 2 Heatexchanger B16		TVC7202	
2	1	Reinforced plate 1 Heatexchanger B16		TVC7201	
1	1	SWEP B16 Double wall (12MP)		TVC7206	

Project: LHCb VErtex LOcator /CO2 Cooling Rack

Title: HEAT EXCHANGER WITH REINFORCED PLATES

Scale: 1:1 | Drawn: MJ kroon

Date: july 2006 | Checked:B Verloat | Dim. in mm

CERN LABEL

NIKHEF
NATIONAL INSTITUTE FOR NUCLEAR PHYSICS AND HIGH ENERGY PHYSICS
P.O.-BOX 41882, 1009 DB Amsterdam, The Netherlands

Revision	Date	Name
A	16-10-'06	A.K.
B		
C		
D		

General tolerances unless otherwise stated according to ISO-2768-mK-E | Geometrical and dimensional tolerances according to ISO-8015-E | Roughness values according to DIN 1302

Size: A0 | Identification No.: TVC72

Sheet No: X | Number of sheets: X

This drawing may not be used for commercial purposes without written authorisation.