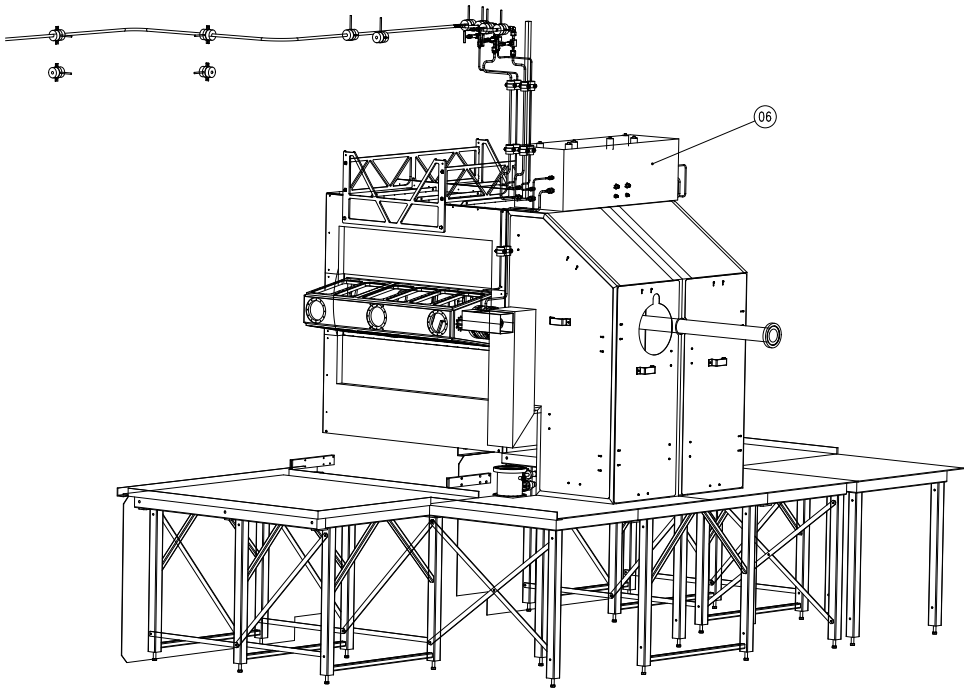

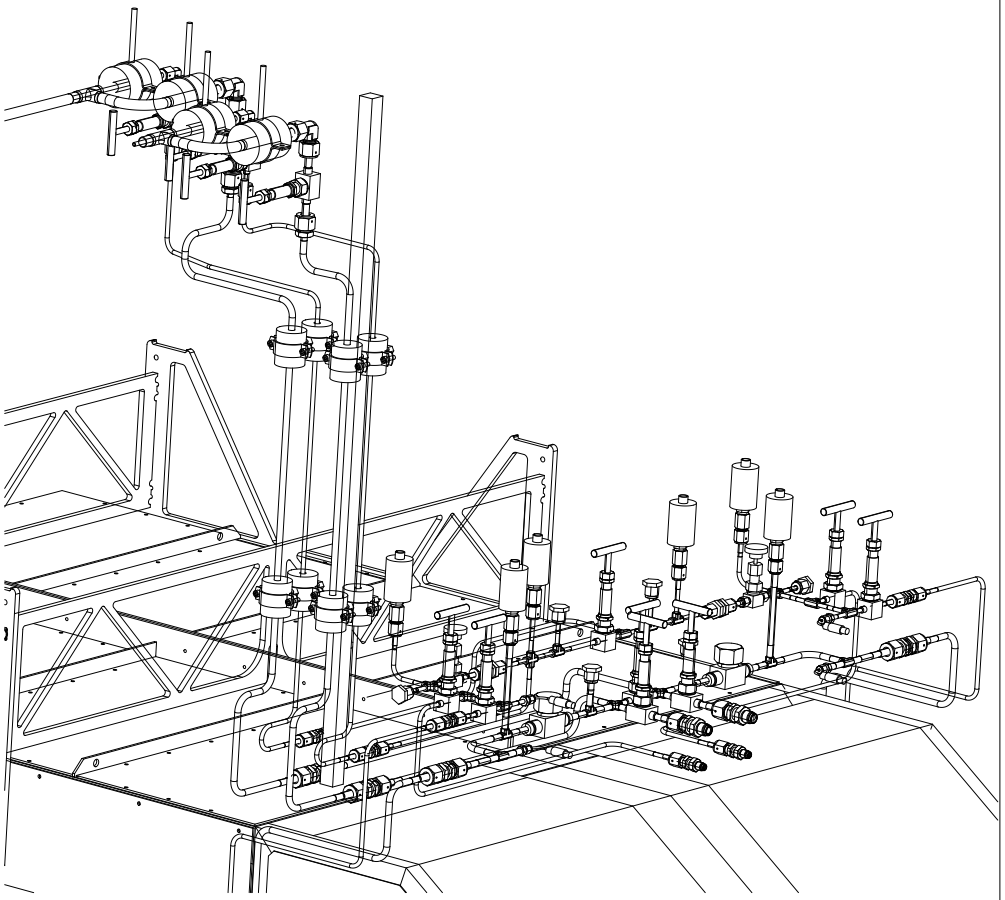

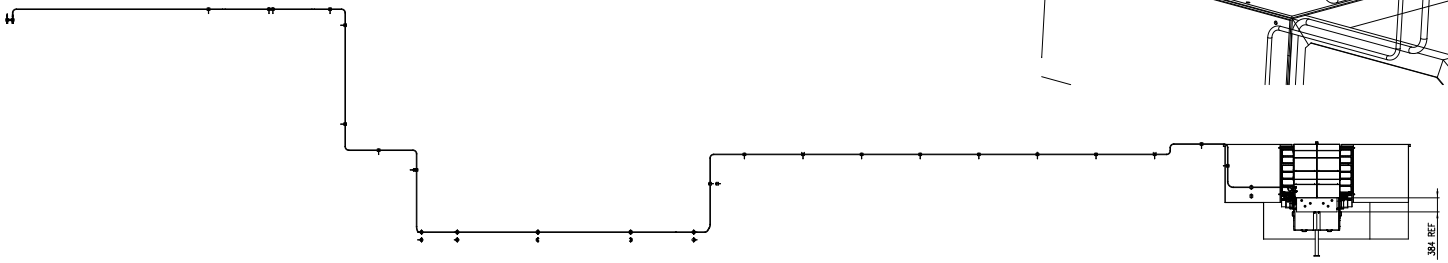

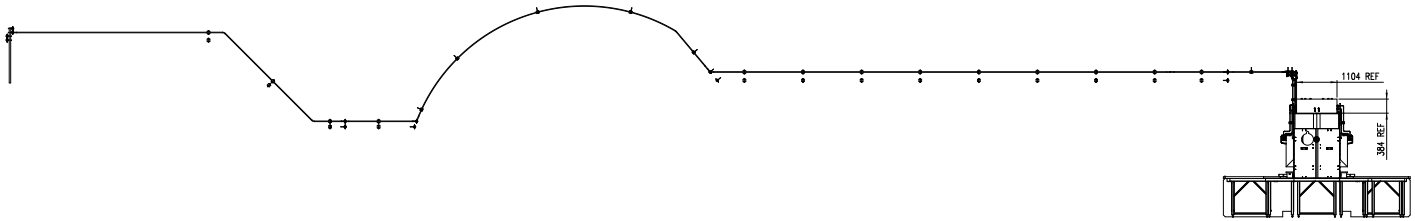

Part	Qty.	Part/Item Name	Material	Drawing nr. / Size / Note	ID / Norm
6	1	VTCS Bridge at VELO general Assy		tvc20	
5	1	Transfer tube general Assy		TVC12	
4	1	Simplified VTCS Evaporator		Personal working Assy	
3	1	Simplified Vertex		Personal Working Assy	
2	1	LB04202HMQ_Tunnel+Vertex area		CERN10jan05	
1	1	Crane Envelope			

Project: LHCb VErtex LOcator

Title: VTCS at VELO Area

Revision	Date	Name
A		
B		
C		
D		

Scale: 1:50 | Drawn: A.K.

Date: FEB. 2007 | Checked: | Dim. in mm

General tolerances unless otherwise stated according to ISO-2768-mK-E | Geometrical tolerances unless otherwise stated according to ISO-8015-E | Roughness unless otherwise stated according to DIN 1302

CERN LABEL

NIKHEF
NATIONAL INSTITUTE FOR NUCLEAR PHYSICS, AND HIGH ENERGY PHYSICS
P.O.41882,1009 DB Amsterdam,The Netherlands

Size: A0 | Identification No.: TVC 70 (PART)

Sheet No: X | Number of sheets: X

This drawing may not be used for commercial purposes without written authorisation.