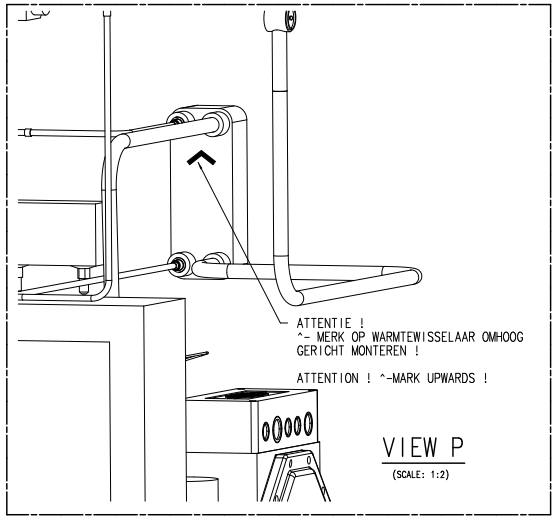

Overview used tube diameters:

Evaporator inlet	ø 3/8"
Evaporator outlet	ø 1/2"
Liquid section	ø 1/4"
Cold gas section	ø 5/8"

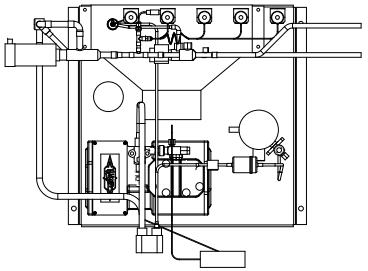

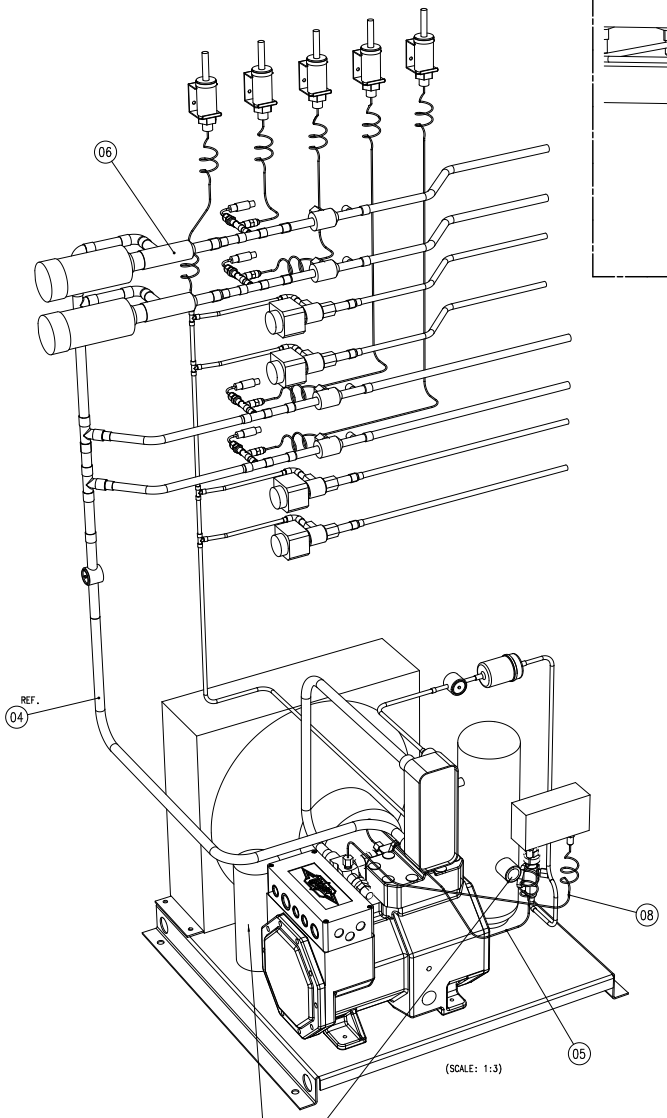

Gewenste optie: * Met olieafscheider.
* Met electrische niveau-uitlezing in vloeistofvat.
* Oil separator included.
* Electrical level monitoring in oil bufferin

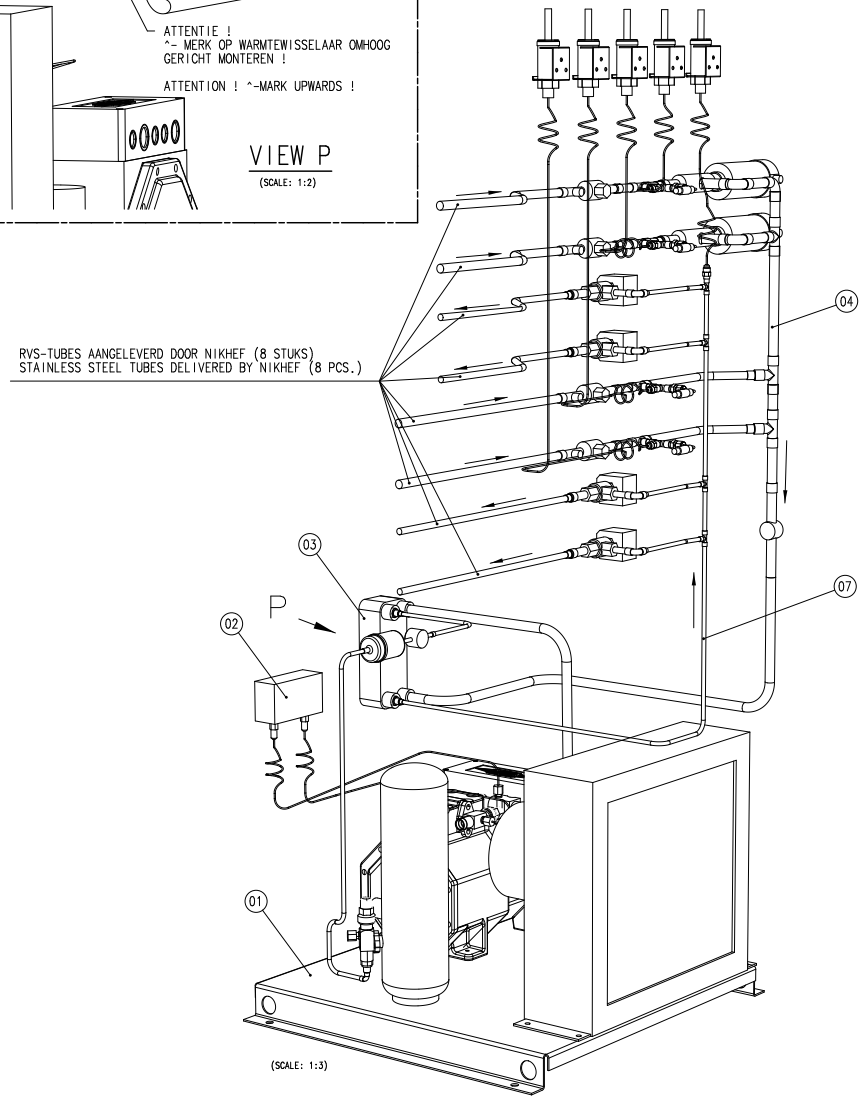

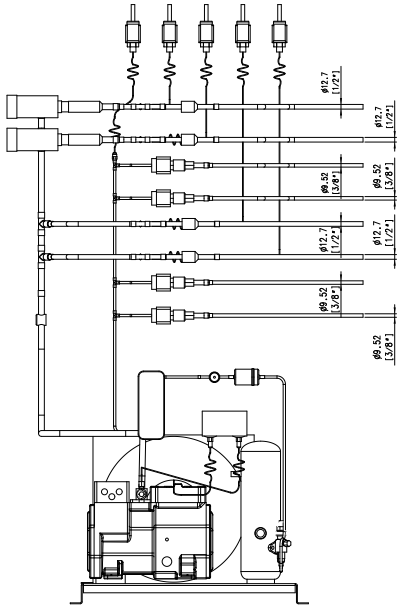

Part	Qty.	Part/Item Name	Material	Drawing nr. / Size / Note	ID / Norm
8	1	SB-Suction Pressure Switch Capillary		TVC6820	
7	1	SB-Liquid Section Assy		TVC68b	
6	1	SB-Evaporator Section Assy		TV68c	
5	1	SB-Discharge Pressure Switch Capillary		TVC6821	
4	1	SB-Cold Gas Section Assy		TVC68f	
3	1	Main Intercooler		SWEP B5x16	
2	1	Compressor Pressure Protector		Danfoss KP15/060-126166	
1	1	Air Cooled Condenser Unit		Bitzer LH32/2KC-05.2y	

Project: LHCb VErtex LOcator / Freon Rack

Title: Air-Cooled VTCS Secondary B Ass'y

Revision		Date	Name
	A	21-12-'06	A.K.
	B		
	C		
	D		

Scale: 1:5 | Drawn: A.K. | Dim. in mm

Date: 14-11-'06 | Checked:

CERN LABEL

NIKHEF
NATIONAL INSTITUTE FOR NUCLEAR PHYSICS, AND HIGH ENERGY PHYSICS
P.O.41882, 1009 DB Amsterdam, The Netherlands

General tolerances unless otherwise stated according to ISO-2768-mK-E	Geometrical tolerances unless otherwise stated according to ISO-8015-E	Roughness unless otherwise stated according to DIN 1302

Size: A0 | Identification No.: TVC 68

Sheet No: 1 | Number of sheets: X

This drawing may not be used for commercial purposes without written authorisation.