Overview used tube diameters:

Evaporator inlet	ø 3/8"
Evaporator outlet	ø 1/2"
Evaporator cold gas	ø 5/8"
Liquid section	ø 3/8"
Cold gas section	ø 7/8"
Discharge section	ø 3/8"
Water tubes	ø 22 mm

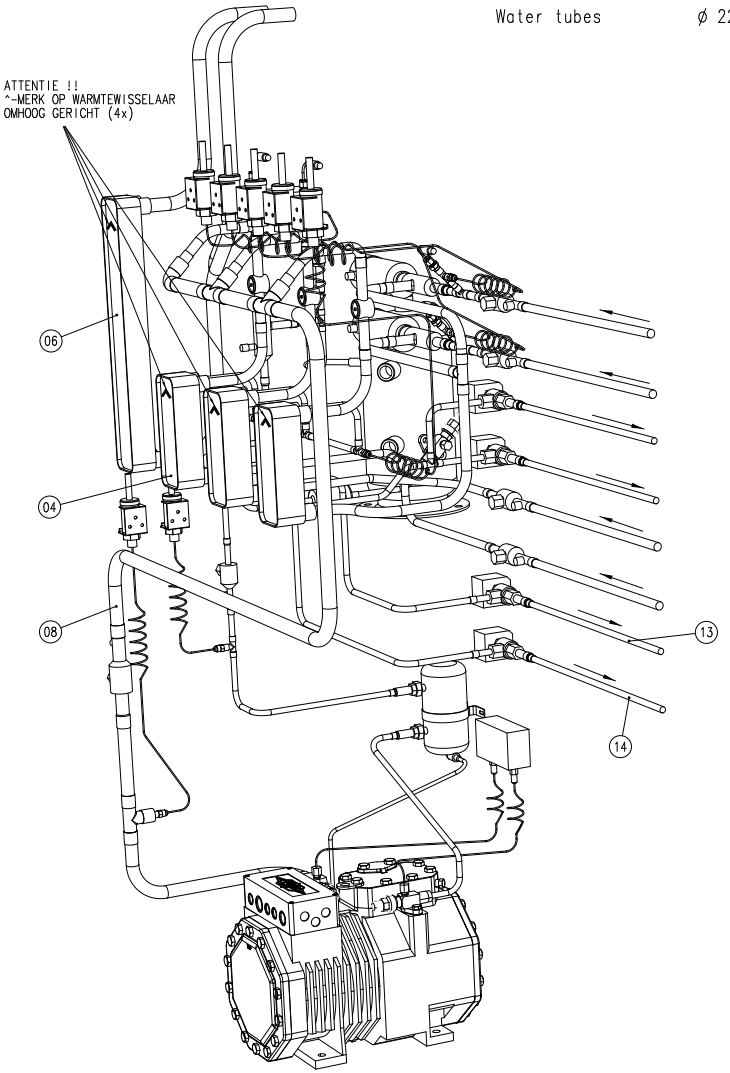

(SCALE: 1:3)

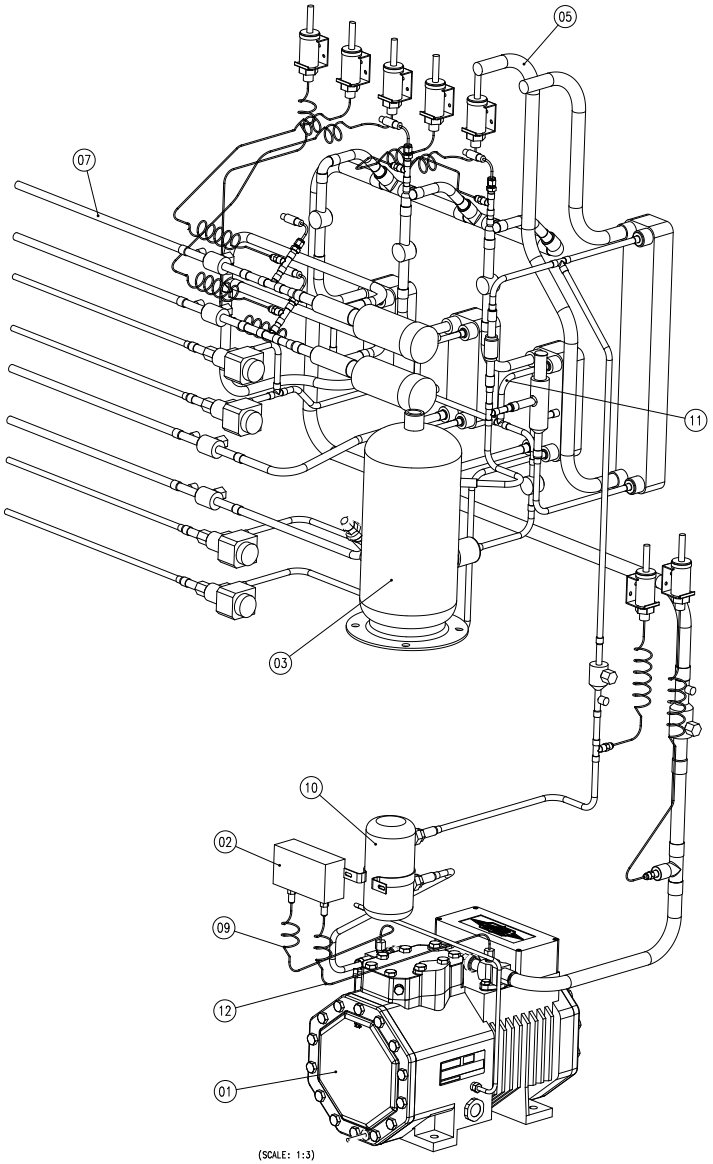

(SCALE: 1:3)

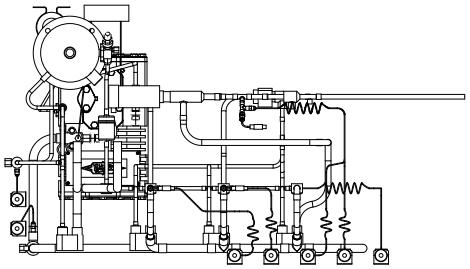

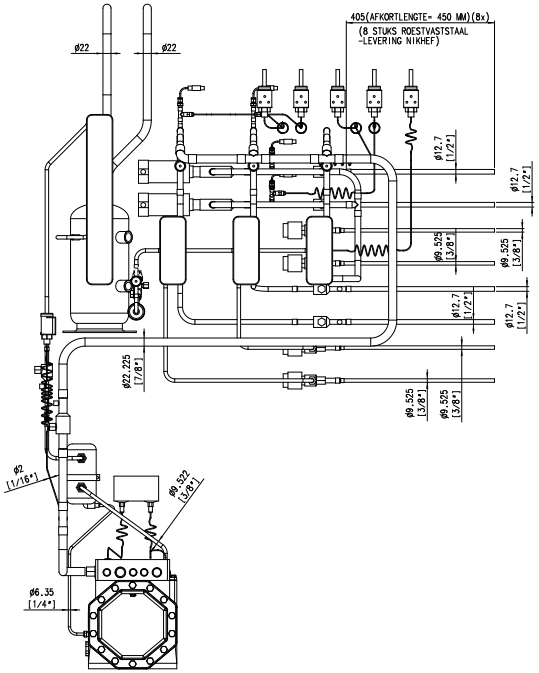

Part	Qty.	Part/Item Name	Material	Drawing nr. / Size / Note	ID / Norm
14	1	SA-Ter/Rigth Evaporator Section		TVC67d	
13	1	SA-Ter/Left Evaporator Section Assy		TVC67c	
12	1	SA-Suction Pressure Switch Capilary		TVC6720	
11	1	SA-Liquid Section Assy		TVC67b	
10	1	SA-Discharge Section Assy		TVC67a	
9	1	SA-Discharge Pressure Switch Capilary		TVC6721	
8	1	SA-Coldgas section Assy		TVC67f	
7	1	SA-Accu Evaporator section		TVC67e	
6	1	SA Freon Condenser		Swep B15x14	
5	1	PA-Water tube assy		TVC67g	
4	3	Main Intercooler		SWEP B5x16	
3	1	Liquid reciever assy		TVC95	
2	1	Compressor Pressure Protector		Danfoss KP15/060-126166	
1	1	Bitzer Compressor		Bitzer 2CC-3.2y	

Project: LHCb VErtex LOcator / Freon Rack

Title: VTCS Secondary A Ass'y

Revision	Date	Name
A	19-12-'06	A.K.
B		
C		
D		

Scale: 1:5 | Drawn: A.K.

Date: 14-11-'06 | Checked: | Dim. in mm

CERN LABEL

NIKHEF
NATIONAL INSTITUTE FOR NUCLEAR PHYSICS, AND HIGH ENERGY PHYSICS
P.O.Box 41882, 1009 DB Amsterdam, The Netherlands

Size: A0 | Identification No.: TVC 67

Sheet No: 1 | Number of sheets: X

This drawing may not be used for commercial purposes without written authorisation.