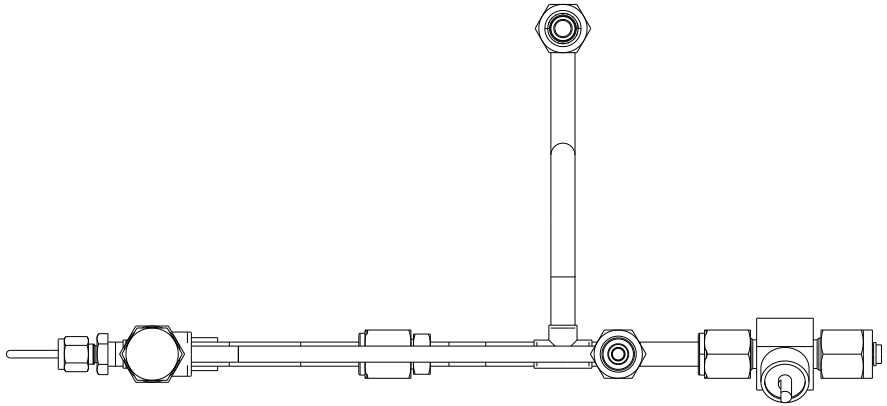

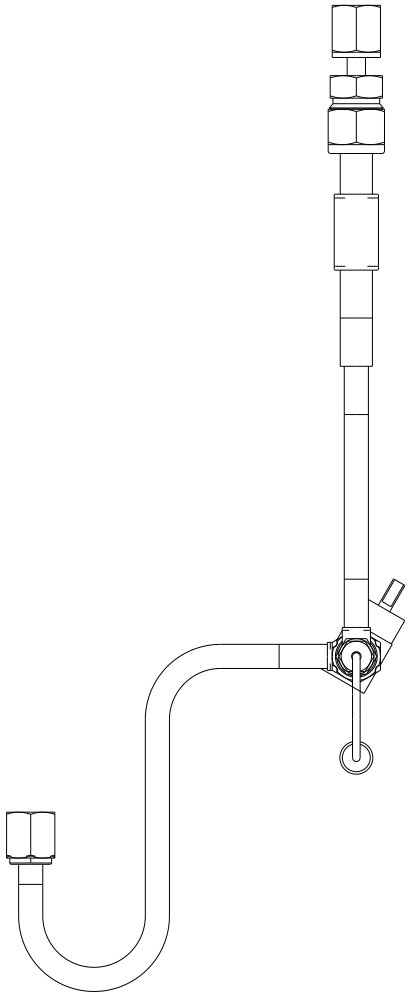

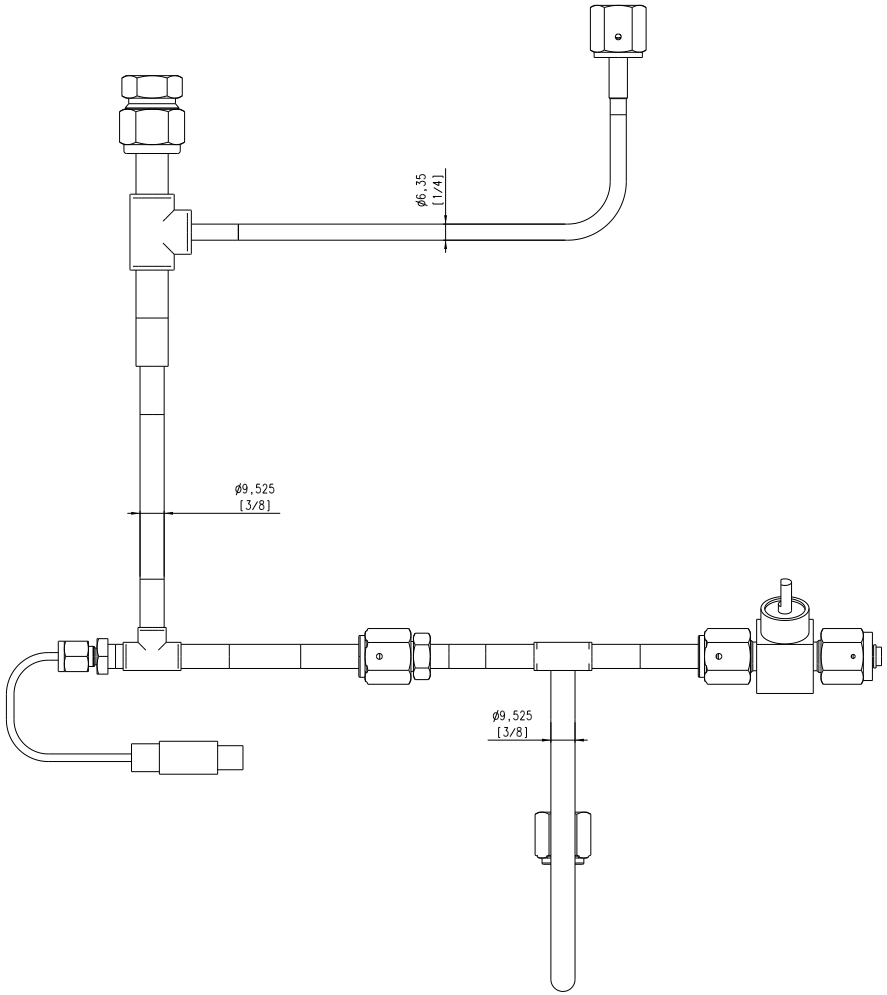

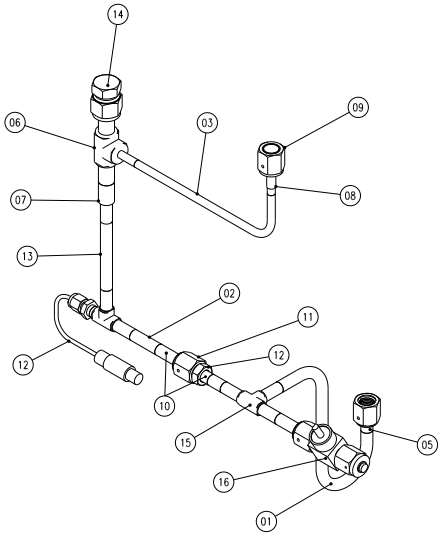

Part	Qty.	Part/Item Name	Material	Drawing nr. / Size / Note	ID / Nor
17	1	1/4In VCR Cap		Swagelok SS-4-VCR-CP	
16	1	2weg klep		tvc5301	
15	1	3/8In Orbital weld Union Tee		Swagelok 316L-6TB7-3	
14	1	STF 1/2 IN Cap		Swagelok SS-810-C	
13	1	Pump inlet tube		TVC65104	
12	1	Submerged PT100 weld assy		TVC85	
11	1	SS_4_HVCR_4SR_20356			
10	3	6LV-4-HVCR-3-1.19SR		butt weld high speed	
9	1	SS-4-VCR-1			
8	1	6LV-4-VCR-3-4TB2		butt weld 1/4 lang	
7	1	316L_8TB7_6_6_20291			
6	1	316L-8TB7-3-8-4		verloop T 1/2-1/4	
5	3	SS-4-HVCR-15R		moer female high speed	
4	1	6LV_4_HVCR_3__60SR_20252			
3	1	pump inlet		tvc65103	
2	1	Pump inlet 2		TVC65102	
1	1	pump inlet 1		TVC65101	

Project: LHCb VErtex LOcator

Title: Rigth Pump inlet tubing

Revision	Date	Name
A	06-03-12	MJ Kraan
B		
C		
D		

Scale: 1:1 | Drawn: BV | Dim. in mm

Date: 20-09-06 | Checked:

General tolerances unless otherwise stated according to	Geometrical tolerances unless otherwise stated according to	Roughness unless otherwise stated according to
ISO-2768-mK-E	ISO-8015-E	DIN 1302

NIKHEF

NATIONAL INSTITUTE FOR NUCLEAR PHYSICS, AND HIGH ENERGY PHYSICS

P.O.41882,1009 DB Amsterdam,The Netherlands

CERN LABEL

Size: A1 | Identification No.: TVC65f

Sheet No: X | Number of sheets: X

This drawing may not be used for commercial purposes without written authorisation.