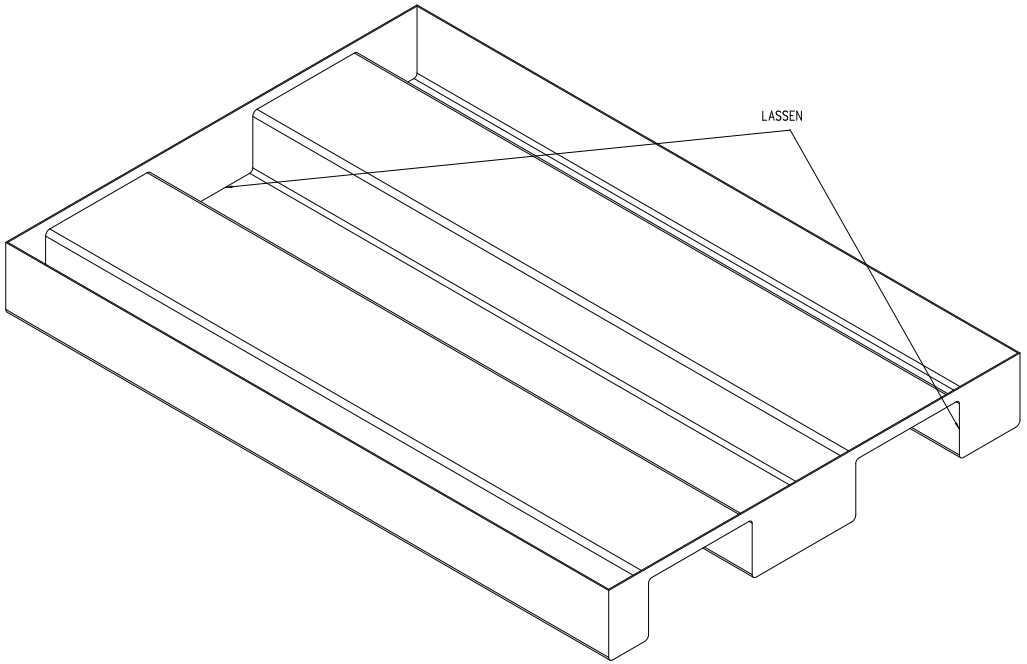

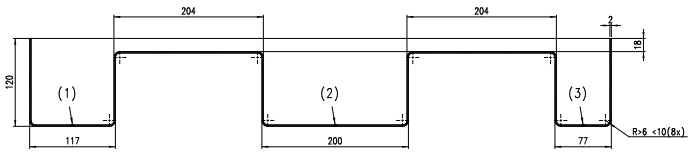

SECTION R-R (1)-(2)-(3) DEELNAAD WANNEER NODIG

01	XX	XX	RVS	XX	XX
PART NO.	NUM-BER	TITLE	MATERIAL	SIZE/NOTE	I.D. NO./NORM

Project: LHCb VErtex LOcator

Title: REK BODEM

Scale: 1:4 | Drawn: H.Bond

Date: 01-06-2006 | Checked:

Dim. in mm

CERN LABEL

Revision	Date	Name
A		
B		
C		
D		

General tolerances/Quantities and dimensions without tolerance stated according to ISO-2768-mK-E | Quantities and dimensions stated according to ISO-8015-E | Roughness values stated according to DIN 1302

NIKHEF
NATIONAL INSTITUTE FOR NUCLEAR PHYSICS AND HIGH ENERGY PHYSICS
P.O.-KISS-1009 SB Amsterdam, The Netherlands

Size: A0 | Identification No.: TVC 6201

Sheet No: X | Number of sheets: X

This drawing may not be used for commercial purposes without written authorisation.