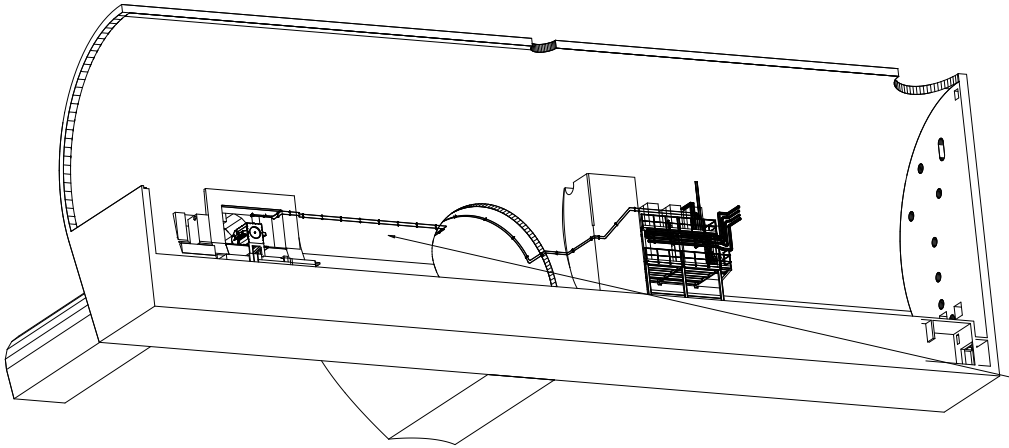

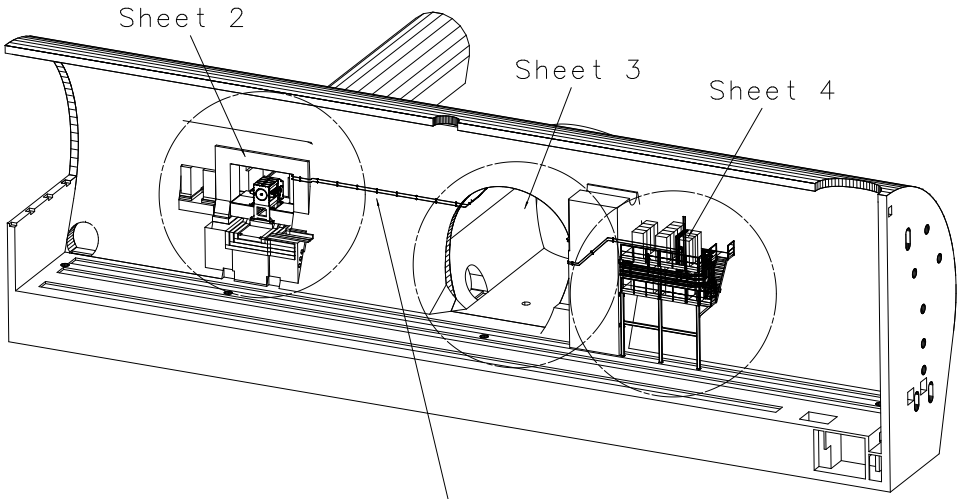


VTCS Concentric
Transfer Tubes

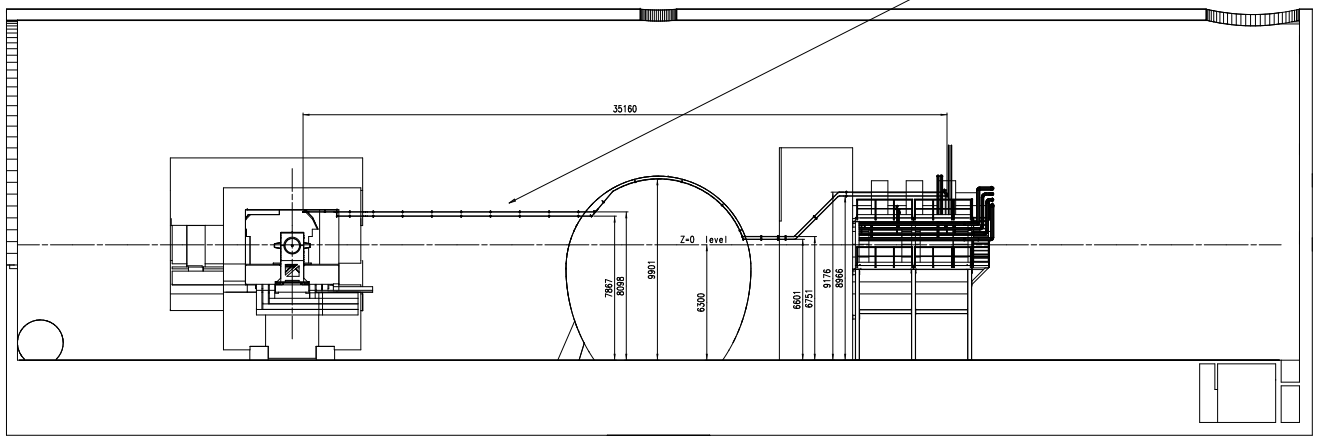


- For construction details and partslist of the concentric tube and connections see sheet 5.
- Partslist is at sheet 5.
- Dimensions of general tube routing are for reference, CERN drawing LHCF28280013 must be followed for construction.
- For information on neighbouring tubes see CERN drawings:
  lhcf28280005
  lhcf28280008
  lhcf28280010

| NO. | NUMBER | TITLE | MATERIAL | SIZE/NOTE | I.D. NO./NORM |
|---|---|---|---|---|---|
| Project: LHCb VErtex LOcator | | | | | |
| Title: VTCS Concentric Transfer Tube | | | | | |
| Scale: 1:100 | Drawn: B.Verlaat | | | | |
| Date: 9-8-05 | Checked: | | Dim. in mm | | |

| Revision | Date | Name |
|---|---|---|
| A | 21-10-05 | Verlaat |
| B | | |
| C | | |
| D | | |

CERN LABEL

General tolerances unless otherwise stated according to ISO-2768-mK-E | Geometrical and dimensional specifications stated according to ISO-8015-E | Roughness values stated according to DIN 1302

NIKHEF
NATIONAL INSTITUTE FOR NUCLEAR PHYSICS AND HIGH ENERGY PHYSICS
P.O.-BOX 41882, 1009 DB Amsterdam, The Netherlands

Size: A0 | Identification No.: TVC12 Sheet 1

Sheet No: 1 Number of sheets: 5

This drawing may not be used for commercial purposes without written authorisation.