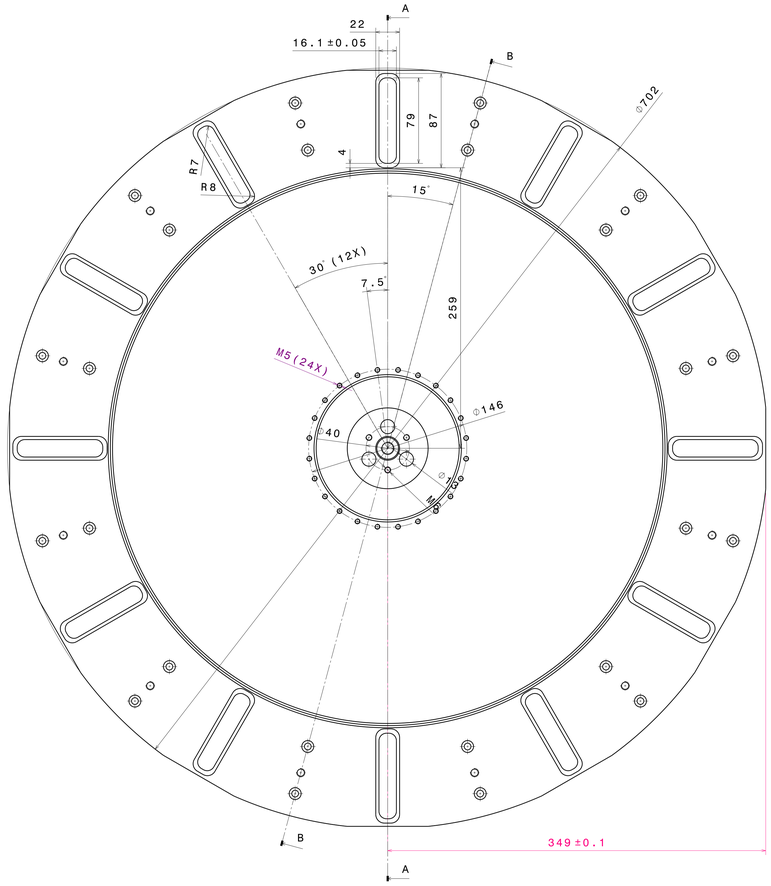

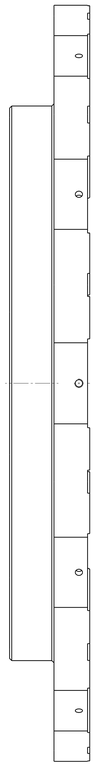

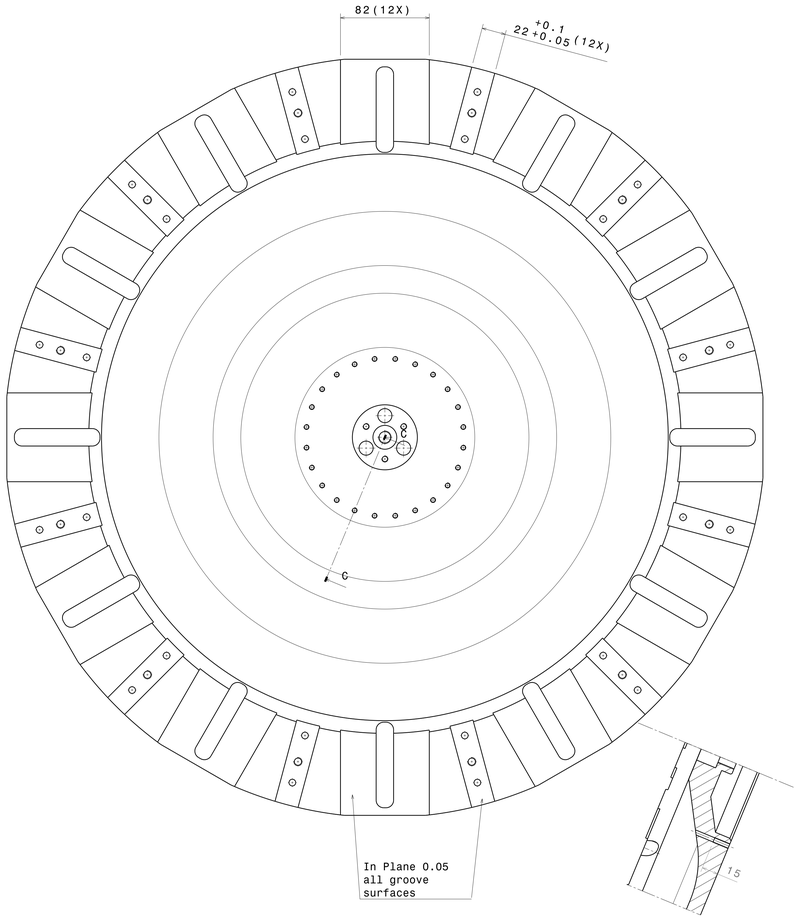

Section view C-C
Scale: 1:2

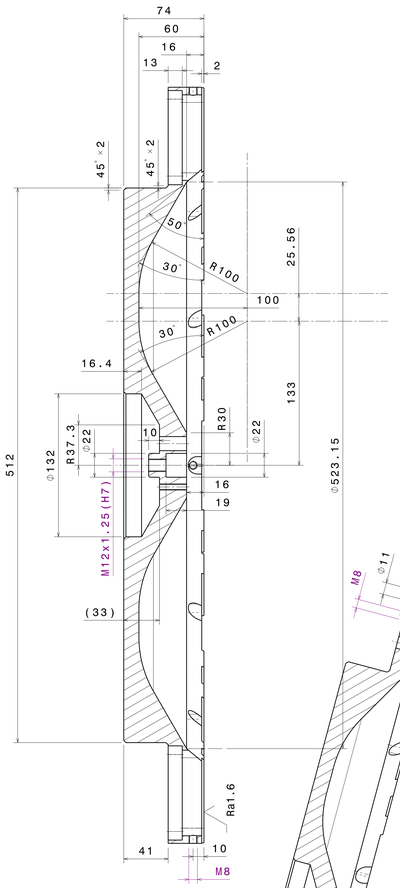

Section view A-A
Scale: 1:2

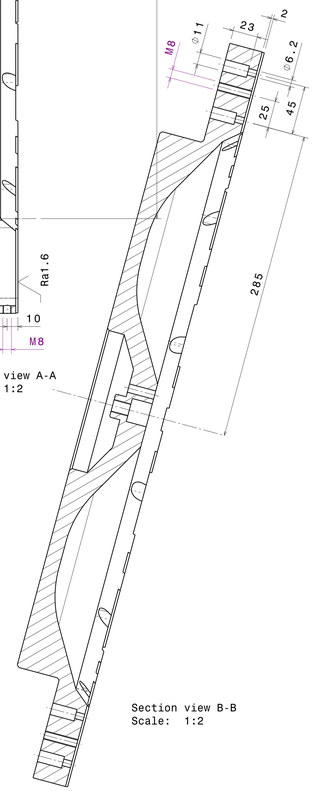

Section view B-B
Scale: 1:2

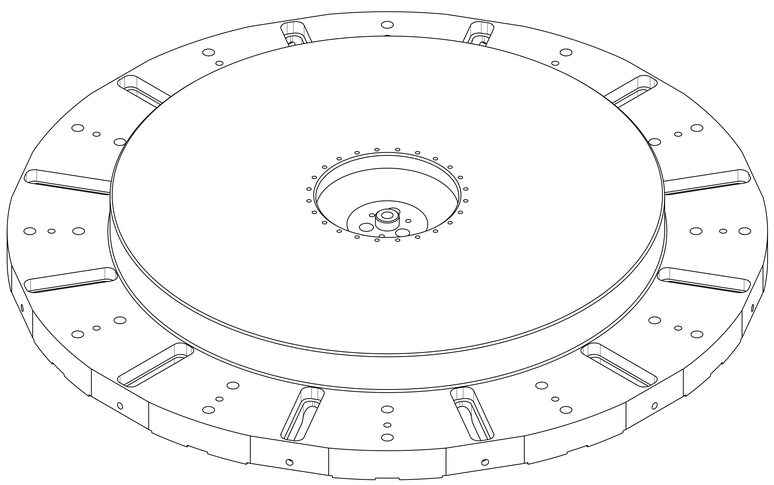

Isometric view
Scale: 1:2

general roughness Ra 3.2

01	XX	XX	AISI 304	XX	XX
PART NO.	NUMBER	TITLE	MATERIAL	SIZE/NOTE	I.D. NO./NORM

Project: X

Title: Intermediate Filter Base

REVISIONS		Date	Name
	A		
	B		
	C		
	D		

Scale: 1:2
Date: 21-11-2011
Drawn: M Doets
Checked:
Dim. in mm.

general tolerances unless otherwise stated according to: ISO-2768-mK-E
geometrical tolerances unless otherwise stated according to: ISO-8015-E
Roughness unless otherwise stated according to: DIN-1302

NIKHEF
National institute for subatomic physics
P.O.Box 41882, 1009 DB Amsterdam, The Netherlands

CERN LABEL

Size: A0
Identification No.: IF 01.001
Sheet No.: X Number of sheets: X

This drawing may not be used for commercial purposes without written authorisation.