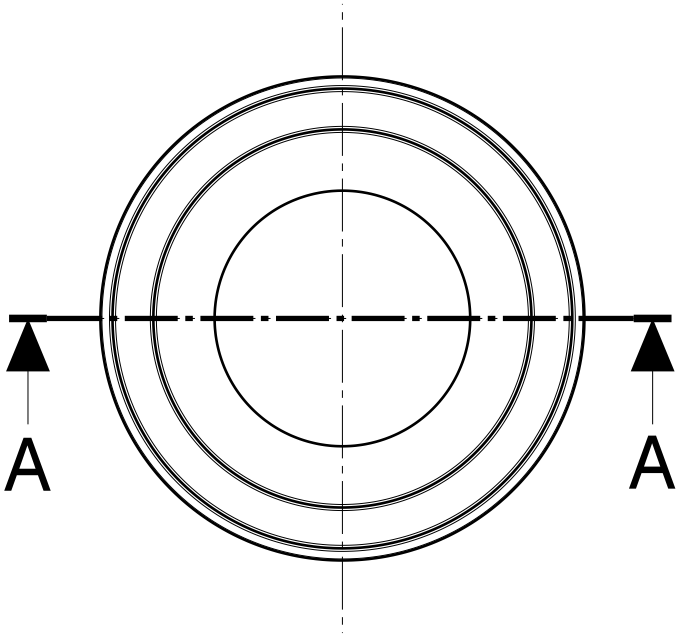

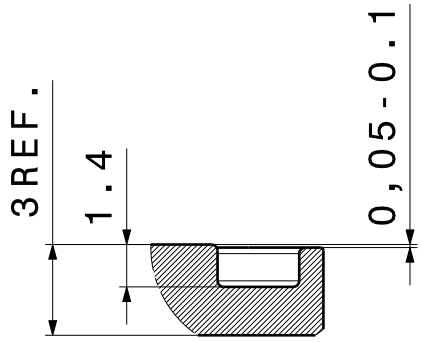

Detail B
Scale: 4:1

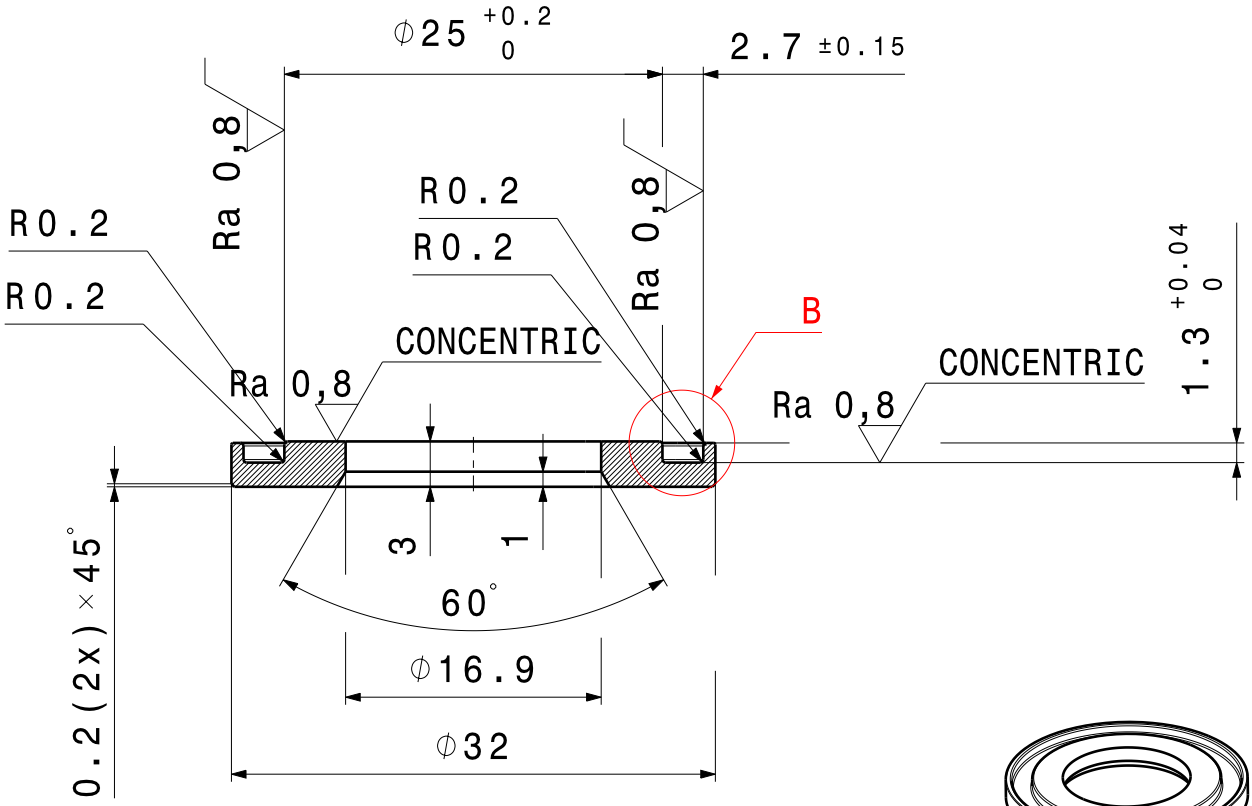

Section view A-A
Scale: 2:1

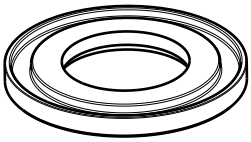

Product annealed after machining at 725 +/-30°C

General tolerances unless otherwise stated according to :ISO-2768-mK-E Geometrical tolerances unless otherwise stated according to:ISO-8015-E Rougness unless otherwise stated according to :ISO-1302	+0.1	Material: Ti-2 (Grade 2) (3.7035) Annealed
Project: Astroparticle Physics KM3NeT Top folder: Penetrators	Units: mm Size: A4	Date: 27/03/2014 Revision: C Engineer: A. Korporaal
Name: Adapter Ring 2A		Checked: A. Korporaal Item number: AA6300 Status: Released
NIKHEF National Institute for Subatomic Physics Science Park 105, 1098XG Amsterdam		Nikhef number: 45361-MT-01541

This drawing may not be used for commercial purposes without written authorisation.