HORIZONTAL CROSSING A-A

SCALE 1:5

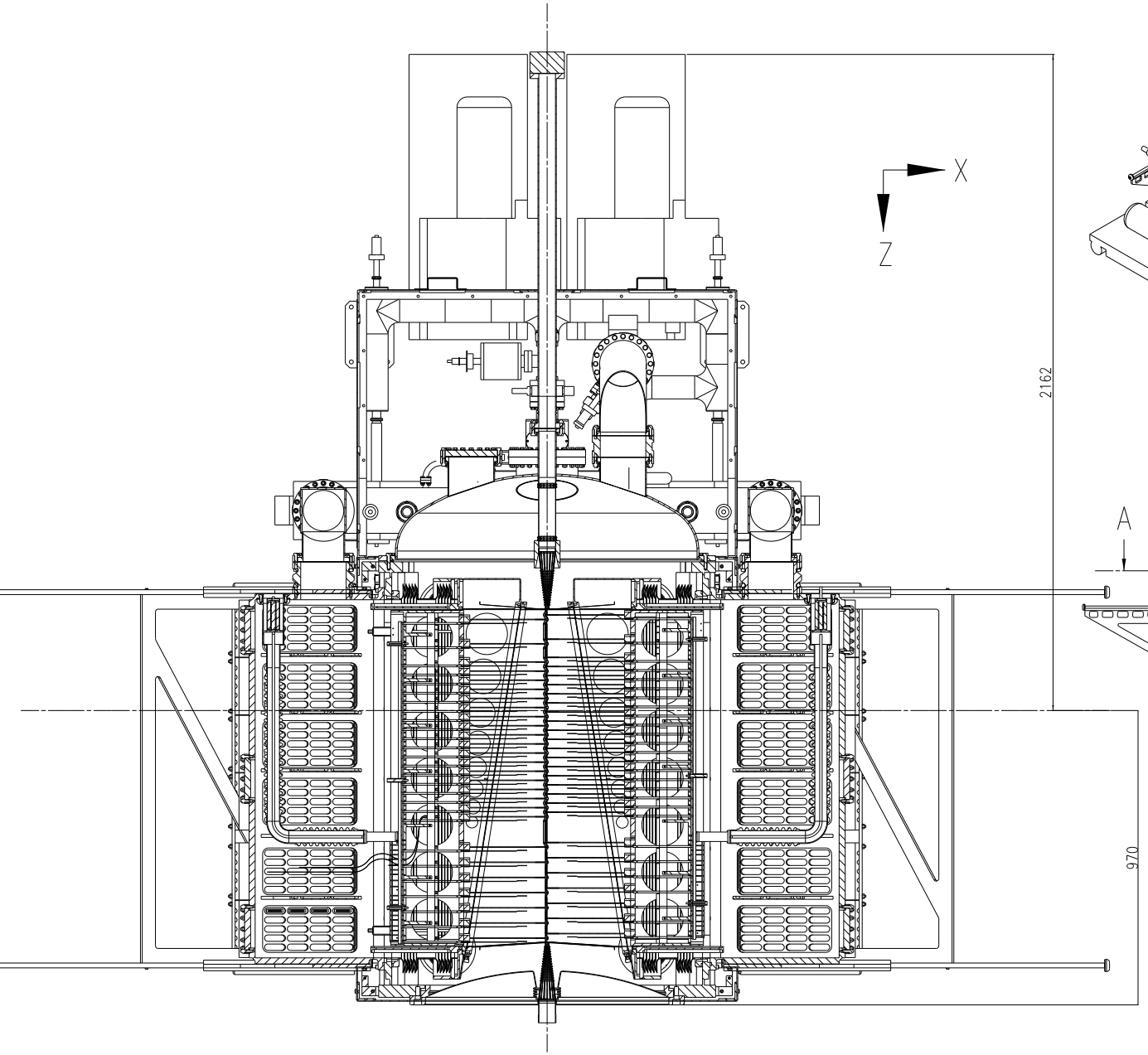

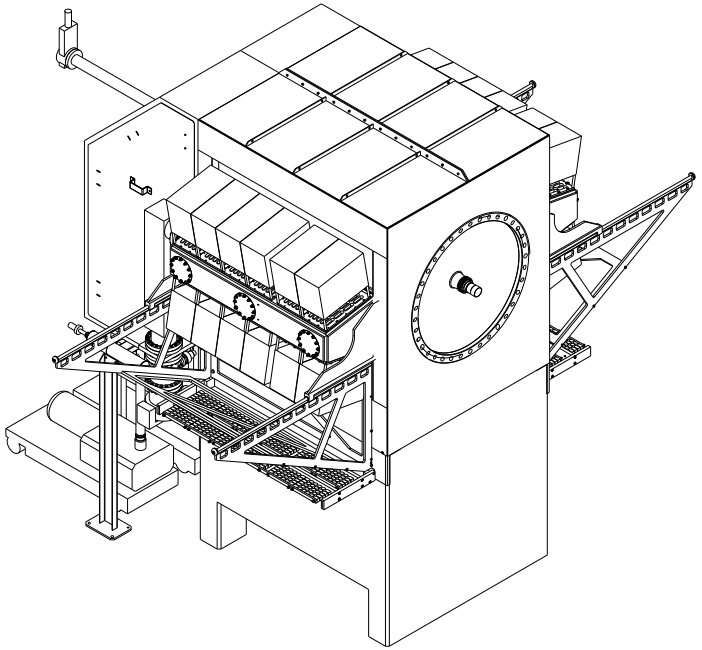

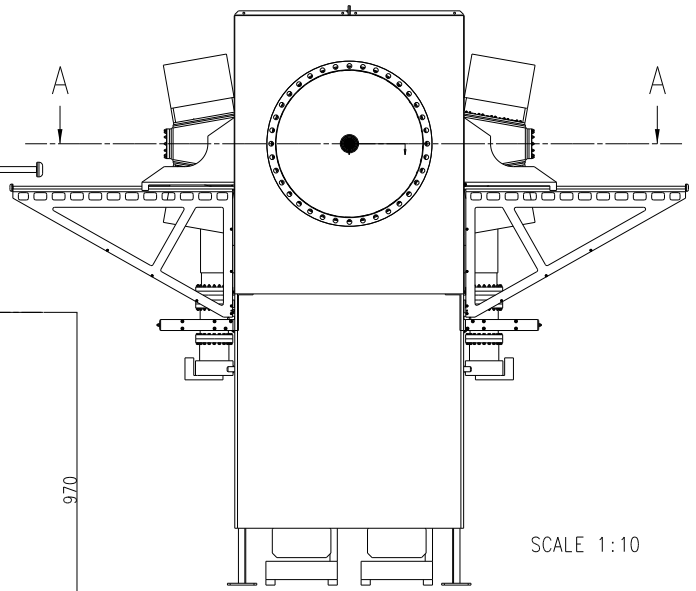

SCALE 1:10

Project: LHCb VErtex LOcator	Revision	Date	Name
Title: VERTEX LOCATOR HORIZONTAL CROSSING	A		
	B		
	C		
Scale: 1:5	Drawn: M.J. Kraan		
Date: june 2002	Checked:	Dim. in mm	
NIKHEF NATIONAL INSTITUTE FOR NUCLEAR PHYSICS, AND HIGH ENERGY PHYSICS P.O. 41882, 1009 DB Amsterdam, The Netherlands	CERN LABEL		

General tolerances unless otherwise stated according to ISO-2768-mK-E	Geometrical tolerances unless otherwise stated according to ISO-8015-E	Roughness unless otherwise stated according to DIN 1302

Size	Identification No.:
A0	TVA0002

Sheet No: X Number of sheets: X

This drawing may not be used for commercial purposes without written authorisation.