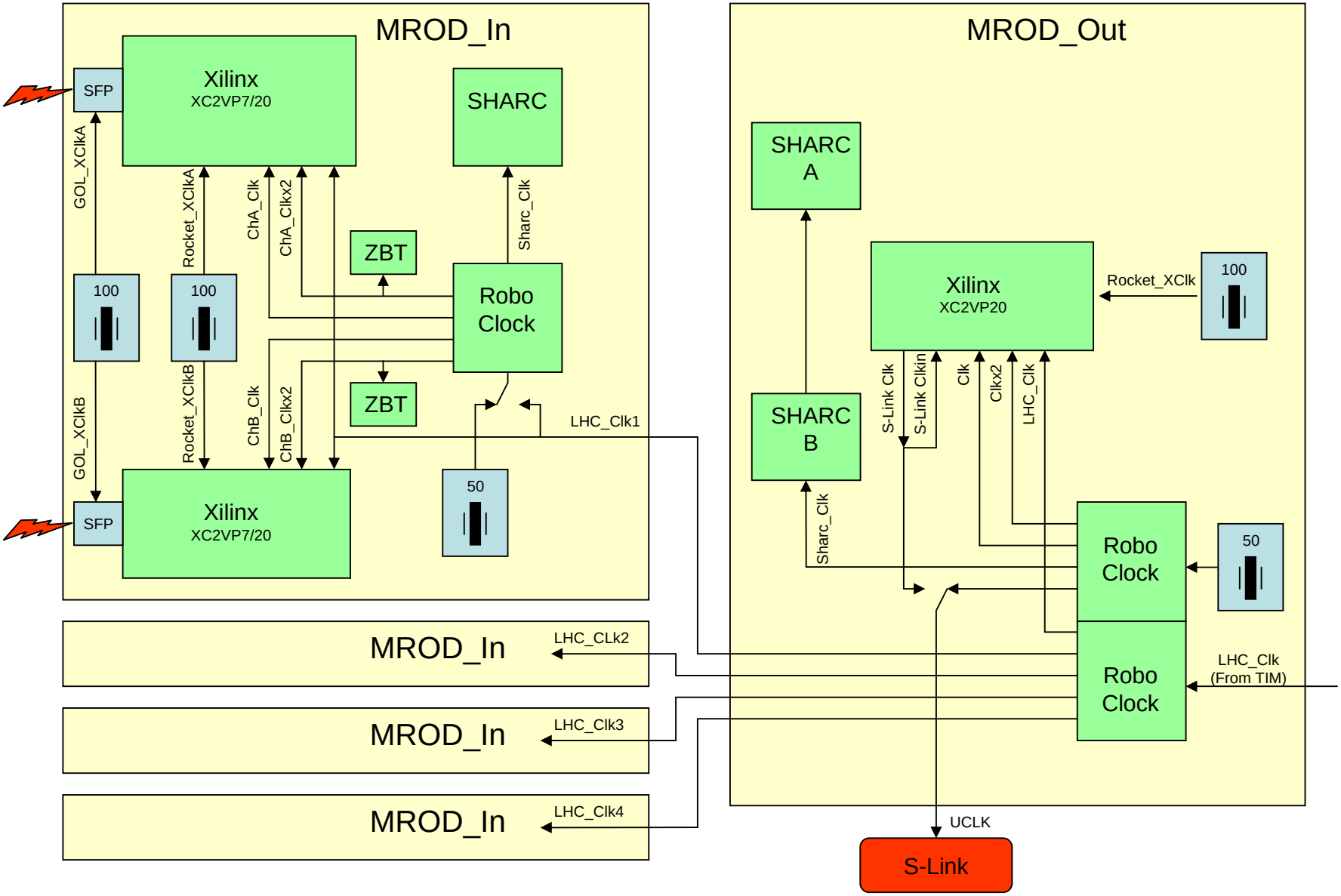

MROD-X Clocks