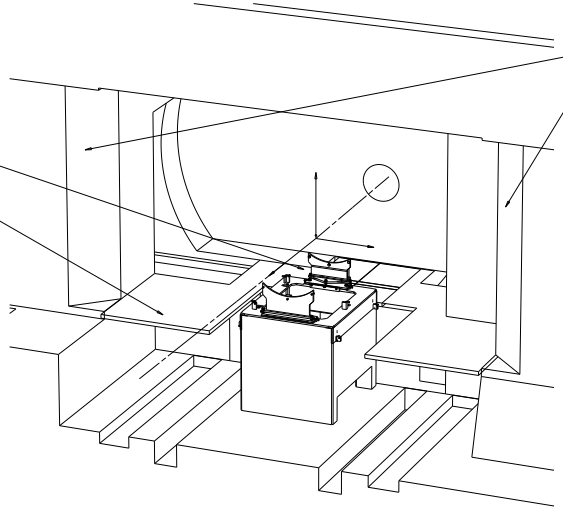

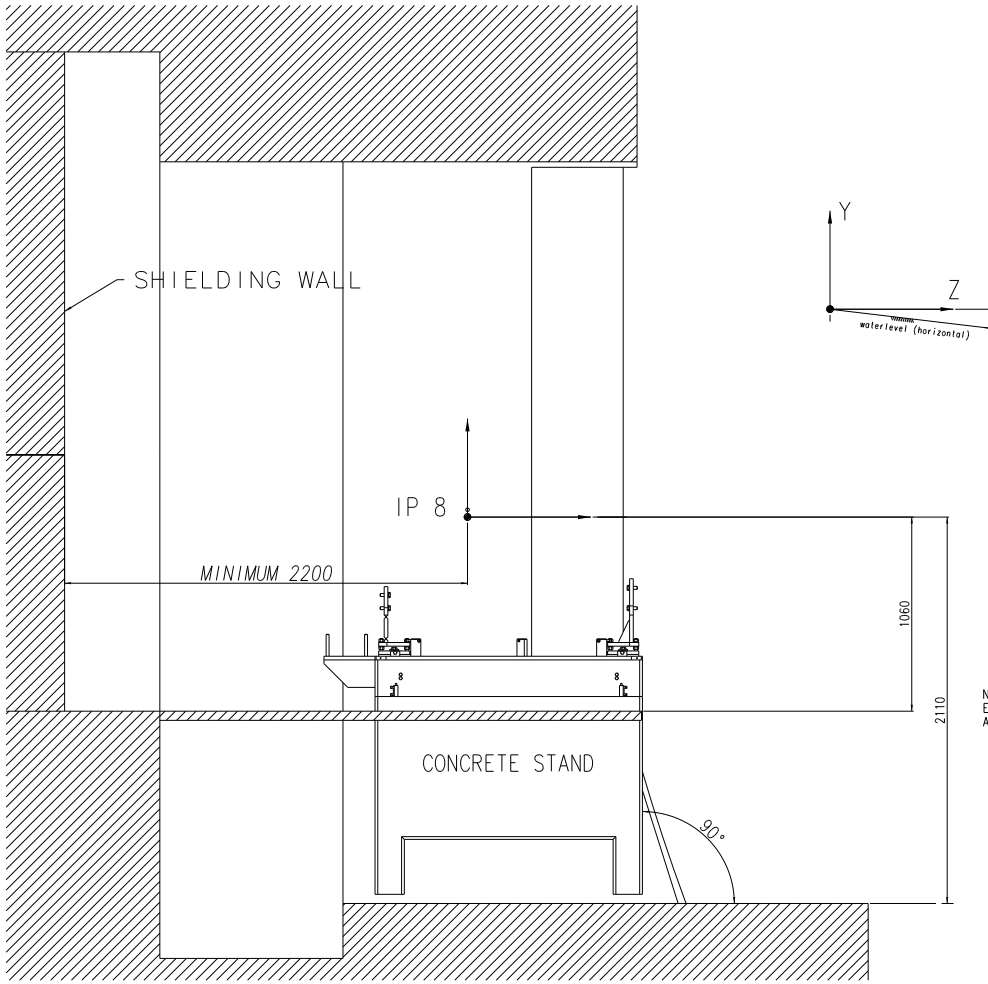

NOTE:
ELEVATED FLOOR SAME HEIGHT
AS LHC TUNNEL FLOOR

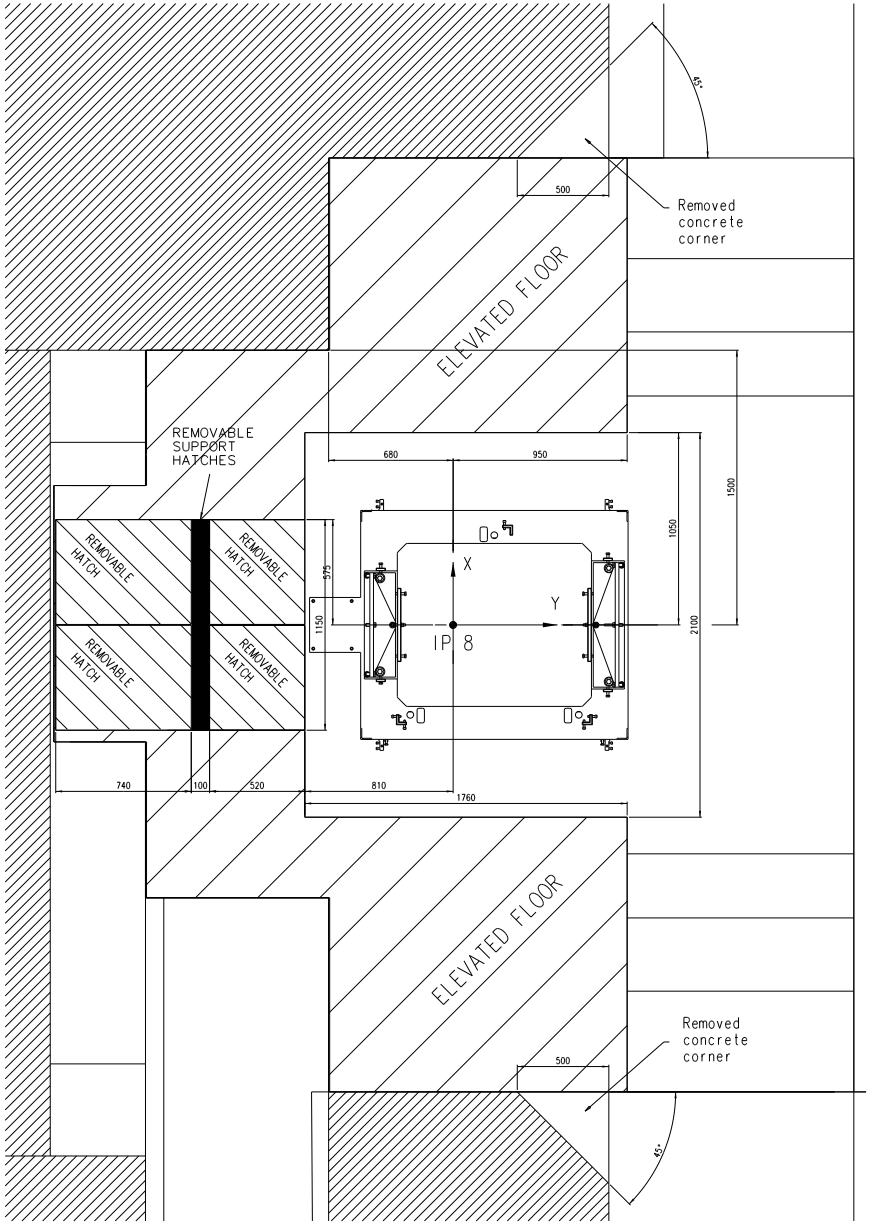

Project: LHCb VErtex LOcator	Revision	Date	Name
Title: ELEVATED FLOOR CONSTRAINS	A	8/4/2002	M.J. Kraan
Scale: 1:20	B		
Date: jan 2002	C		
Drawn: M.J. Kraan	D		
Checked: M. Doets			
Dim. in mm	General tolerances unless otherwise stated according to ISO-2768-mK-E	Geometrical tolerances unless otherwise stated according to ISO-8015-E	Roughness unless otherwise stated according to DIN 1302
CERN LABEL	Size A0	Identification No.: LHB TVE01	
NIKHEF NATIONAL INSTITUTE FOR NUCLEAR PHYSICS AND HIGH ENERGY PHYSICS P.O.41882,1009 DB Amsterdam,The Netherlands	Sheet No: X	Number of sheets: X	

This drawing may not be used for commercial purposes without written authorisation.