Note 1: Weld copper braids into copper blocks
according to specification ASR-S-002

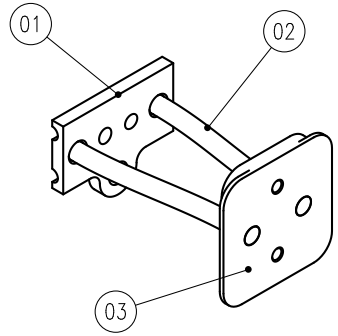

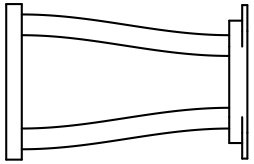

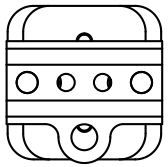

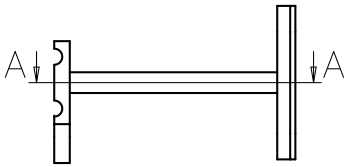

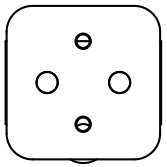

Section A-A:
(Scale 2:1)

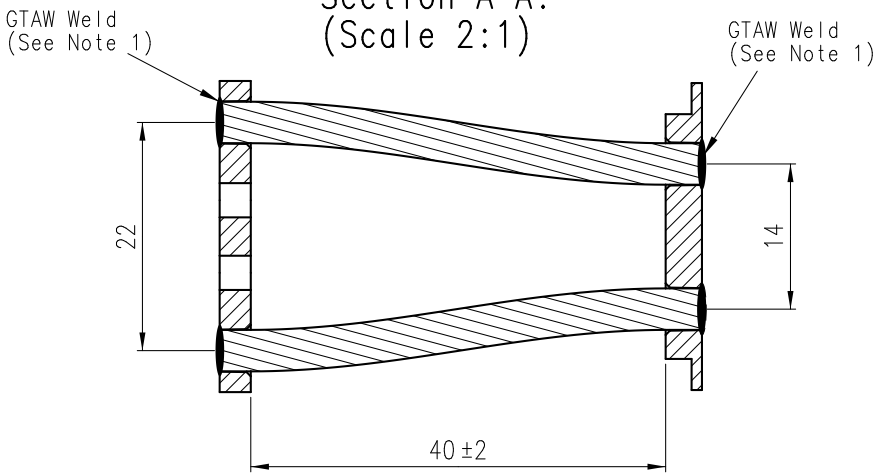

PART NO.	NUMBER	TITLE	MATERIAL	SIZE/NOTE	I.D. NO./NORM
03	1	ASTS Thermal IF Plate			ASM3105
02	2	Copper Braid	Copper	ø4*50	NIKHEF Store
01	1	P1 Evaporator block (ASTS Ver.)			ASM3106

Project: TTCS - Tracker Thermal Control System

Title: P1 ASTS Evaporator Braid Assy

Revision	Date	Name
A		
B		
C		

Scale: 1:1
Date: 2-6-2004
Drawn: B.Verlaat
Dim. in mm

General tolerances unless otherwise stated according to	Geometrical tolerances unless otherwise stated according to	Roughness unless otherwise stated according to
ISO-2768-fH-E	ISO-8015-E	ISO 1302

NIKHEF
NATIONAL INSTITUTE FOR NUCLEAR PHYSICS, AND HIGH ENERGY PHYSICS
P.O.41882,1009 DB Amsterdam,The Netherlands
Visitors: Kruislaan 409,1098 SJ,Amsterdam
tel:+31-(0)20-5922095
fax:+31-(0)20-5925155

Size: A3
Identification No.: ASM59
Sheet No: 1 Number of sheets: 1

http://www.nikhef.nl/pub/departments/mt/projects/ams/SiTracker/Postscript/ASM-Evaporator/asm59.ps