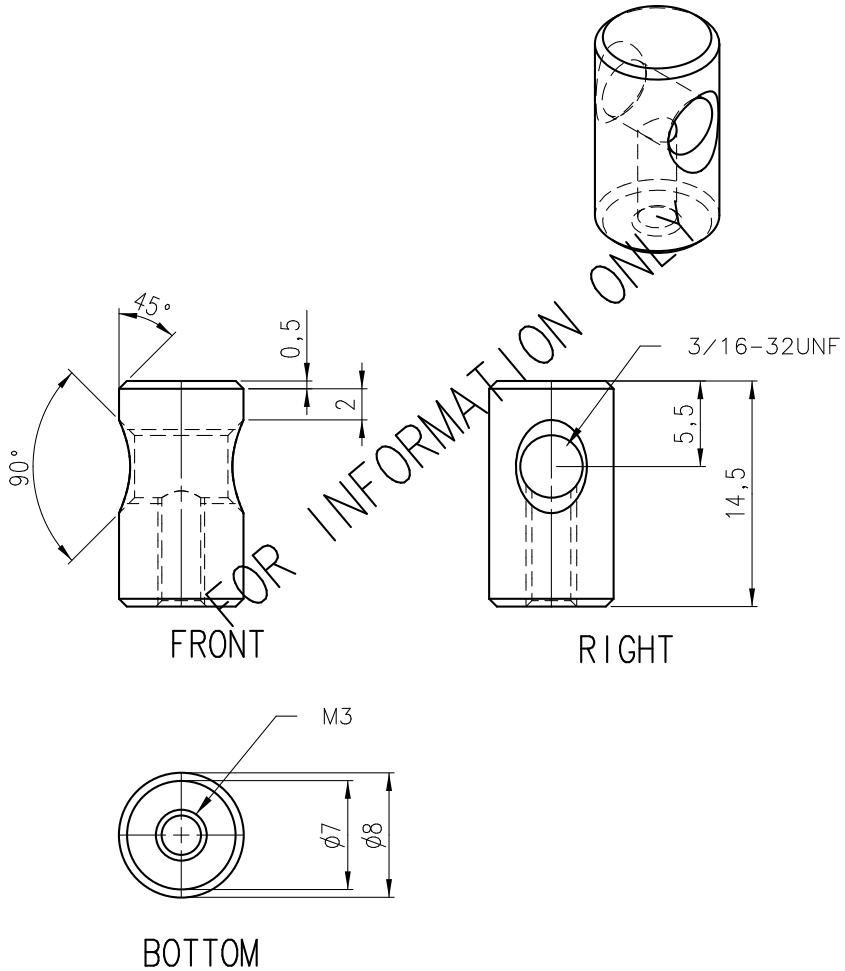

PART NO.	NUMBER	TITLE	MATERIAL	SIZE/NOTE	I.D. NO./NORM
01	X	XX	CRES 316	XX	XX

Project: TTCS - Tracker Thermal Control System

Title: Modified Ikea Insert

Revision		Date	Name
	A		
	B		
	C		

General tolerances unless otherwise stated according to	Geometrical tolerances unless otherwise stated according to	Roughness unless otherwise stated according to
ISO-2768-fH-E	ISO-8015-E	ISO 1302

Scale: 3:1

Date: 8-3-2004

Drawn: L van Diepen

Dim. in mm

NIKHEF

NATIONAL INSTITUTE FOR NUCLEAR PHYSICS, AND HIGH ENERGY PHYSICS
P.O.41882,1009 DB Amsterdam,The Netherlands
Visitors: Kruislaan 409,1098 SJ,Amsterdam
tel:+31-(0)20-5922095
fax:+31-(0)20-5925155

Size: A4

Identification No.: ASM2504

Sheet No: 1 Number of sheets: 1

http://www.nikhef.nl/pub/departments/mt/projects/ams/SiTracker/Postscript/ASM-Evaporator/ASM2504.ps