MACHINE STEP 5

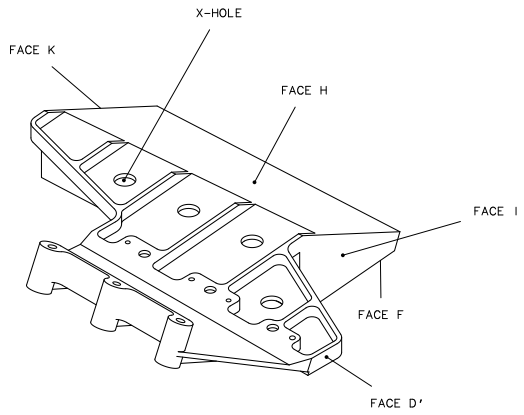

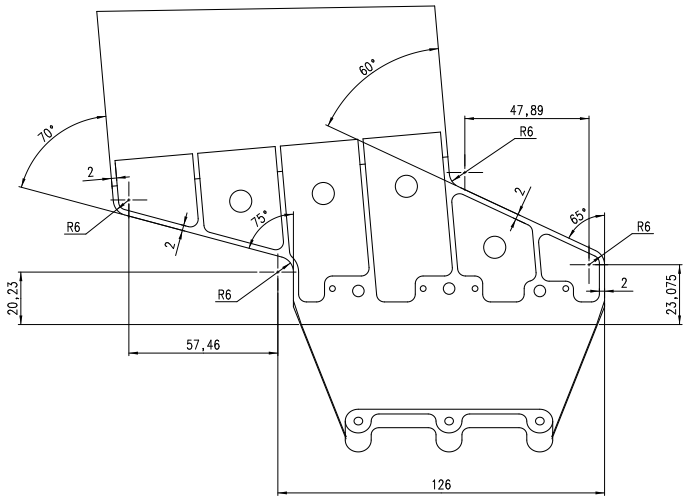

TOP

- CLAMP PART USING THE FOUR Ø8.5 HOLES
- SUPPORT ON FACE F AND F'
  WITH A SPACER BLOCK

FOR INFORMATION ONLY

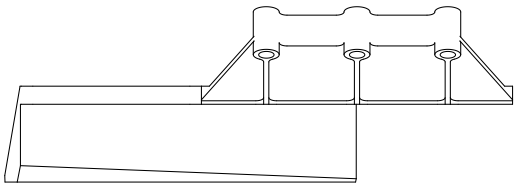

FRONT

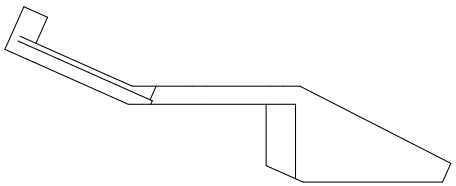

RIGHT

01	X	XX	XX	XX	XX
PART NO.	NUMBER	TITLE	MATERIAL	SIZE/NOTE	I.D. NO./NORM

Project: TTCS - Tracker Thermal Control System

Title: Flange exit clamp base (mill order)

Revision		Date	Name
	A	10-6-04	Verlaat
	B		
	C		

General tolerances unless otherwise stated according to ISO-2768-fH-E	Geometrical tolerances unless otherwise stated according to ISO-8015-E	Roughness unless otherwise stated according to ISO 1302

Scale: 1:1 | Drawn: L.v Diepen | Dim. in mm

Date: 25-3-2004

NIKHEF
NATIONAL INSTITUTE FOR NUCLEAR PHYSICS AND HIGH ENERGY PHYSICS
P.O.41882,1009 DB Amsterdam,The Netherlands
Visitors: Kruislaan 409,1098 SJ,Amsterdam
tel:+31-(0)20-5922095
fax:+31-(0)20-5925155

Size: A1 | Identification No.: ASM0603

Sheet No: 5 | Number of sheets: 8

http://www.nikhef.nl/pub/departments/mt/projects/ams/SiTracker/Postscript/AS-EvaporatorM/asm0603-5a.ps