MACHINE STEP 3

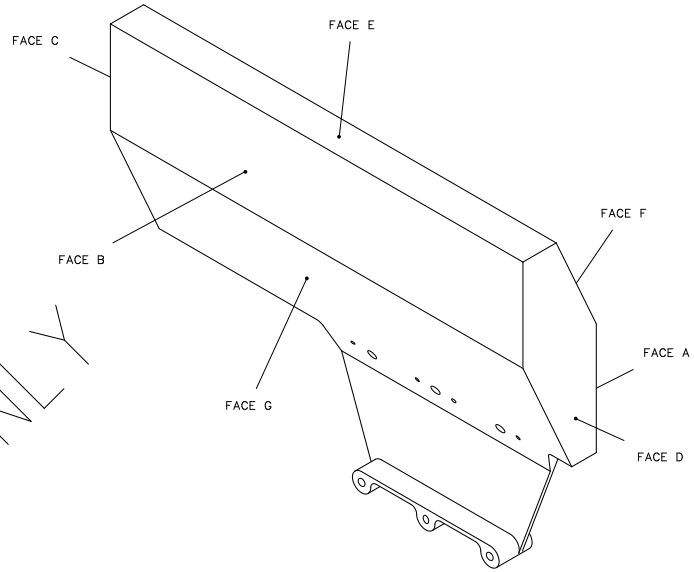

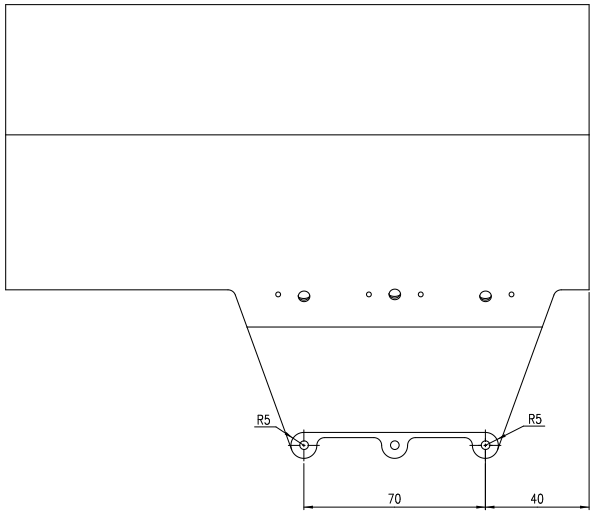

TOP

FOR INFORMATION ONLY

- TURN PART AROUND
- CLAMP BETWEEN FACE C AND D
- SUPPORT ON FACE B
- FACE G // FACE F

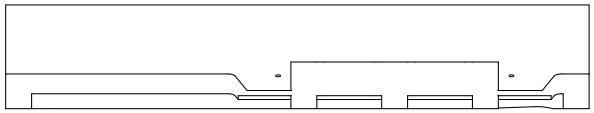

FRONT

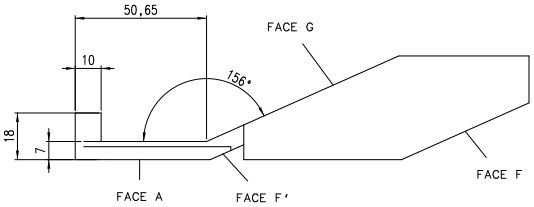

RIGHT

01	X	XX	XX	XX	XX
PART NO.	NUMBER	TITLE	MATERIAL	SIZE/NOTE	I.D. NO./NORM

Project: TTCS - Tracker Thermal Control System

Title: Flange exit clamp base (mill order)

Revision	Date	Name
A	10-6-04	Verlaat
B		
C		

Scale: 1:1	Drawn: L.v Diepen		
Date: 25-3-2004		Dim. in mm	
General tolerances unless otherwise stated according to	Geometrical tolerances unless otherwise stated according to	Roughness unless otherwise stated according to	
ISO-2768-fH-E	ISO-8015-E	ISO 1302	

NIKHEF
NATIONAL INSTITUTE FOR NUCLEAR PHYSICS AND HIGH ENERGY PHYSICS
P.O.41882,1009 DB Amsterdam,The Netherlands
Visitors: Kruislaan 409,1098 SJ,Amsterdam
tel:+31-(0)20-5922095
fax:+31-(0)20-5925155

Size: A1 | Identification No.: ASM0603

Sheet No: 3 Number of sheets: 8

http://www.nikhef.nl/pub/departments/mt/projects/ams/SITracker/Postscript/ASM-Evaporator/asm0603-3a.ps