MACHINE STEP 1

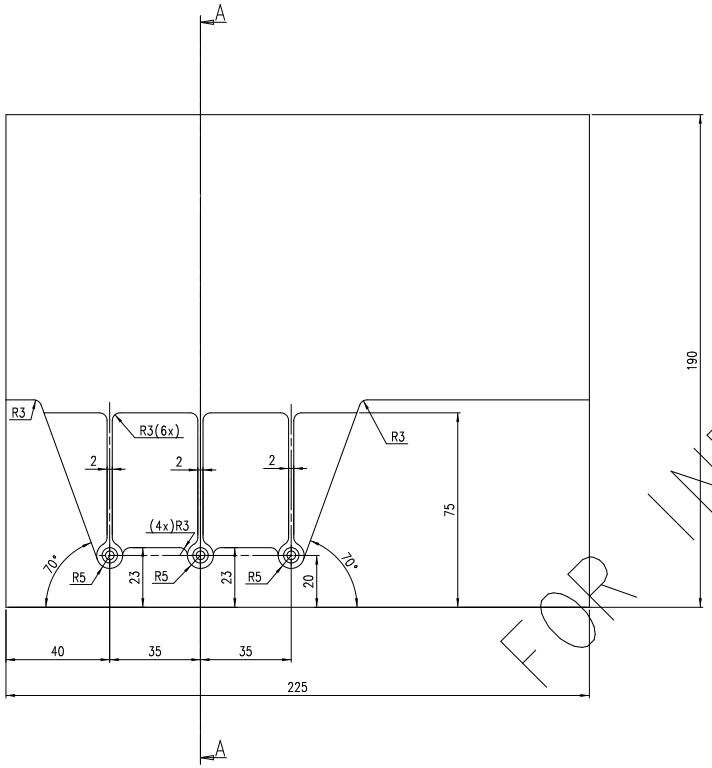

TOP

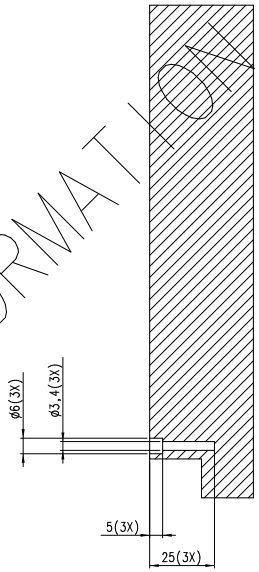

SECTION A-A

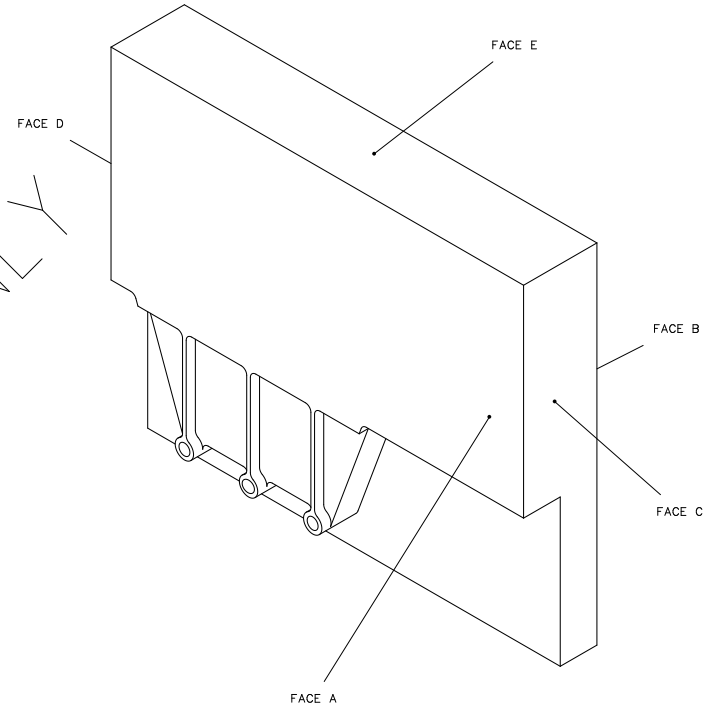

- CLAMP BETWEEN FACE C AND D
- SUPPORT ON FACE B

FOR INFORMATION ONLY

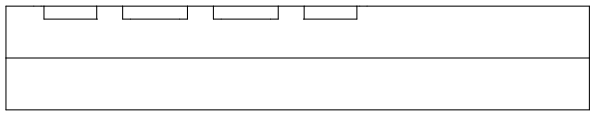

FRONT

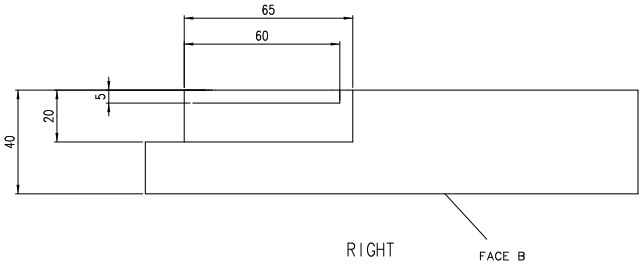

RIGHT

01	X	XX	AA6082	225X190X40	XX
PART NO.	NUM-BER	TITLE	MATERIAL	SIZE/NOTE	I.D. NO./NORM

Project: TTCS - Tracker Thermal Control System

Title: Flange exit clamp base (mill order)

Revision	Date	Name
A	10-6-04	Verlaat
B		
C		

Scale: 1:1 | Drawn: L.v Diepen | Dim. in mm

Date: 25-3-2004

General tolerances unless otherwise stated according to	Geometrical tolerances unless otherwise stated according to	Roughness unless otherwise stated according to
ISO-2768-fH-E	ISO-8015-E	ISO 1302

NIKHEF
NATIONAL INSTITUTE FOR NUCLEAR PHYSICS AND HIGH ENERGY PHYSICS
P.O.41882,1009 DB Amsterdam,The Netherlands
Visitors: Kruislaan 409,1098 SJ,Amsterdam
tel:+31-(0)20-5922095
fax:+31-(0)20-5925155

Size: A1 | Identification No.: ASM0603

Sheet No: 1 | Number of sheets: 8

http://www.nikhef.nl/pub/departments/mt/projects/ams/SiTracker/Postscript/ASM-Evaporator/asm0603-1a.ps