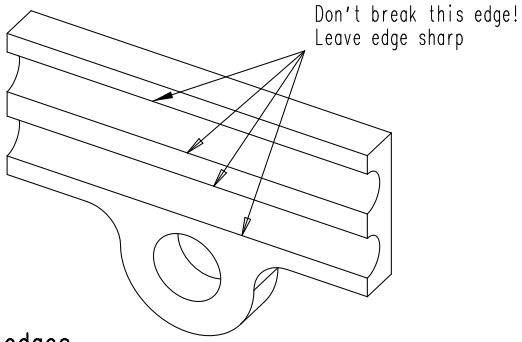

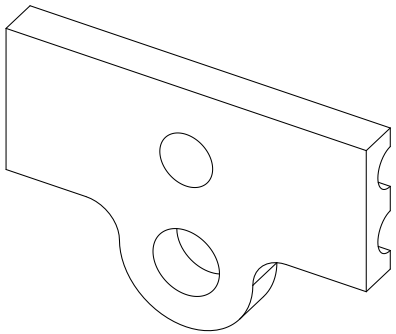

Break sharp edges
except from edges indicated

Back View

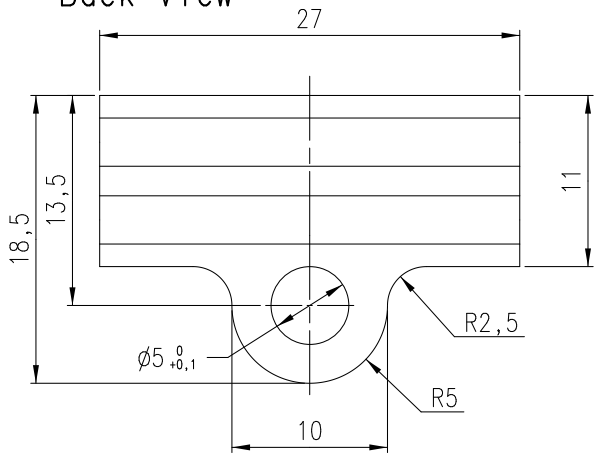

Left View

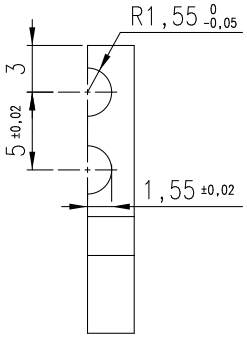

Front View

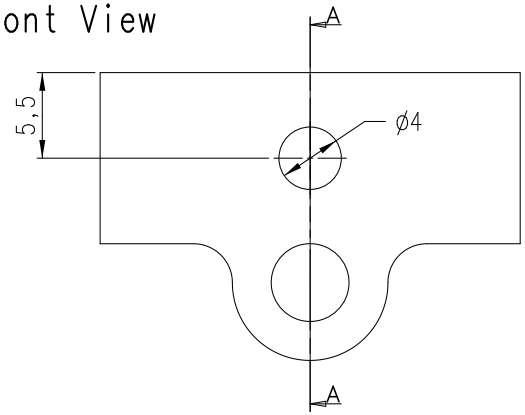

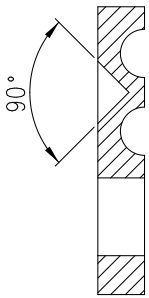

Section A-A:

Unit Mass 7.3 gram

		P234 Thermal bridge cover	ETP Copper		ASM0502
PART NO.	NUMBER	TITLE	MATERIAL	SIZE/NOTE	I.D. NO./NORM

Project: AMS-Silicon Tracker

Title: P234 Thermal bridge cover

Revision		Date	Name
	B	10-9-2002	Verlaat
	C	31-10-2003	Verlaat
	D	27-1-2004	Verlaat

Scale: 3:1 | Drawn: B.Verlaat | Dim. in mm

Date: 7-12-2000

General tolerances unless otherwise stated according to	Geometrical tolerances unless otherwise stated according to	Roughness unless otherwise stated according to
ISO-2768-fH-E	ISO-8015-E	ISO 1302

NIKHEF

NATIONAL INSTITUTE FOR NUCLEAR PHYSICS, AND HIGH ENERGY PHYSICS
P.O.41882,1009 DB Amsterdam,The Netherlands
Visitors: Kruislaan 409,1098 SJ,Amsterdam
tel:+31-(0)20-5922000
fax:+31-(0)20-5925155

Size: A3 | Identification No.: ASM0502d

Sheet No: 1 Number of sheets: 1

http://www.nikhef.nl/pub/departments/mt/projects/ams/SiTracker/Postscript/ASM-Evaporator/asm0502d.ps