Detailed view L:
(From drawing ASM001)

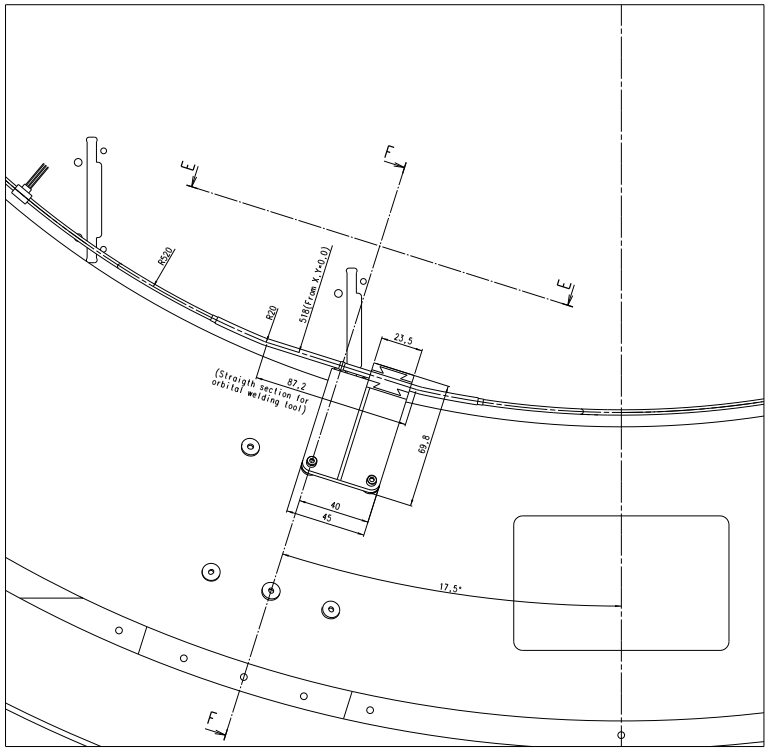

Detailed view M:
(From drawing ASM001)

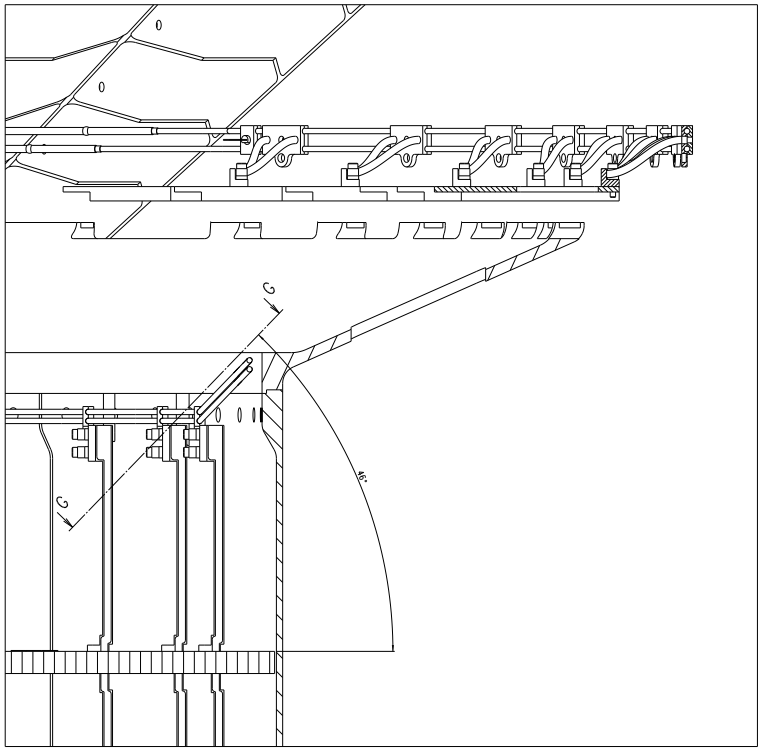

Section E-E:

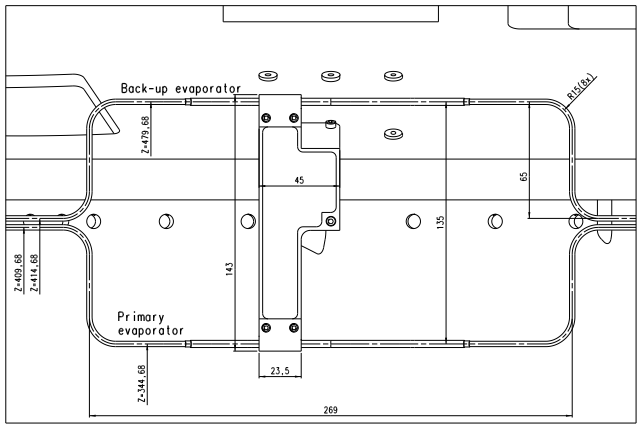

Section F-F:

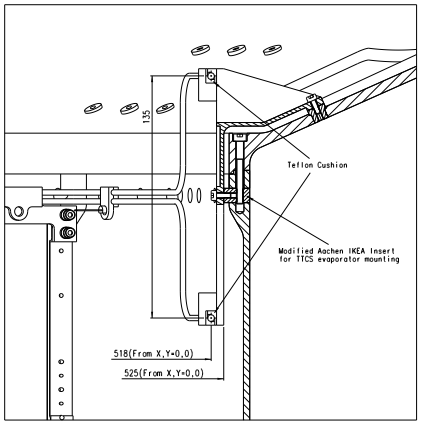

Section G-G:

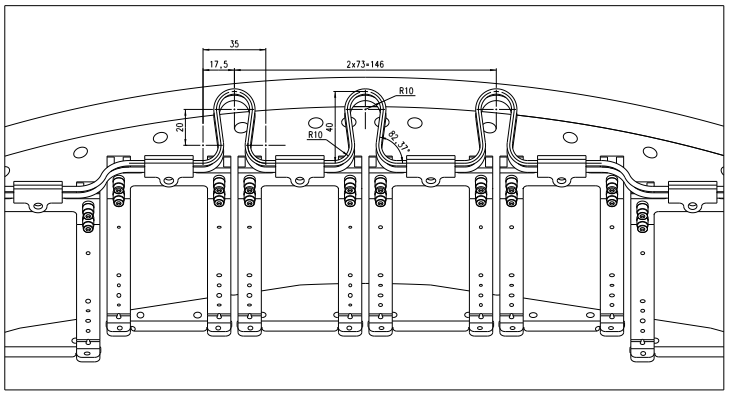

Preliminary!

PART NO.	NUM-BER	TITLE	MATERIAL	SIZE/NOTE	I.D. NO./NORM
Project: AMS-Silicon Tracker					
Title: TTCS Evaporator Details 2					
Scale: 1:1	Drawn: B.Verlaat				
Date: 19-11-2002					

Revision	Date	Name
A		
B		
C		

General tolerances unless otherwise stated ISO 2768-fm-E
Dim. in mm
Sharp-edged tolerance unless otherwise stated ISO 1101-E
Roughness unless stated ISO 1302

NIKHEF
NATIONAL INSTITUTE FOR NUCLEAR PHYSICS, AND HIGH ENERGY PHYSICS
P.O.BOX 41882, 1009 DB Amsterdam, The Netherlands
Visiting address: Kruislaan 409, Amsterdam
tel:+31-(0)20-5922000
fax:+31-(0)20-5925155

Size: A0
Identification No.:
ASM003
Sheet No: 1 Number of sheets: 1

http://www.nikhef.nl/pub/departments/mt/projects/ams/Silicon/Postscript/AMM-Evaporator/asm003.ps