Section AA

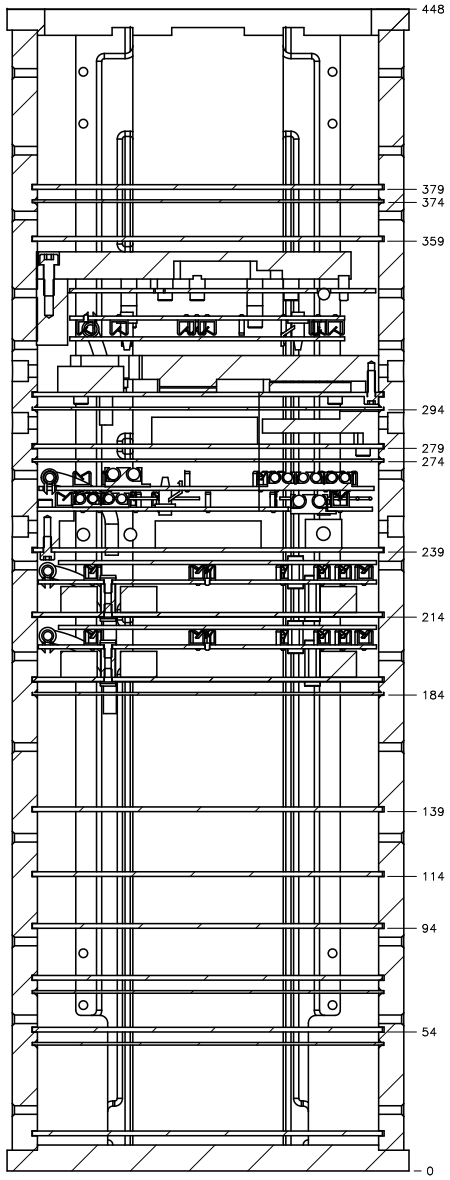

Section BB

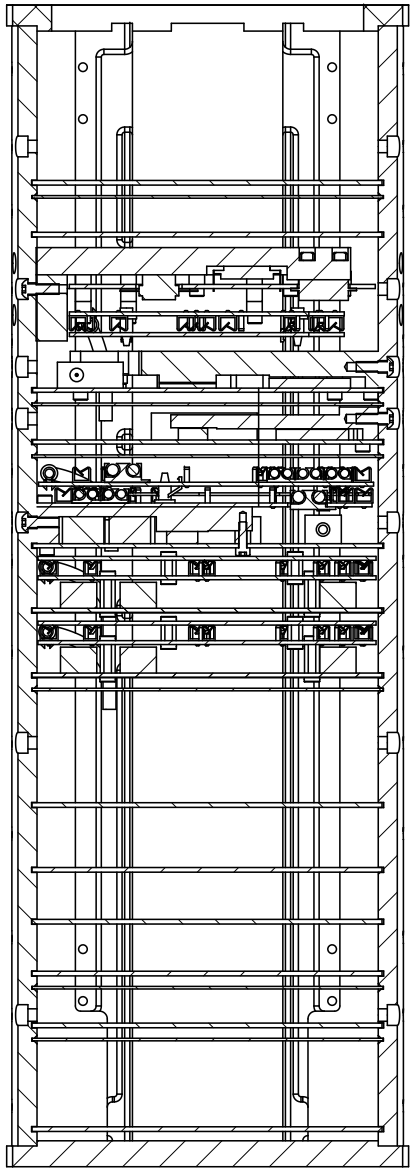

Front View

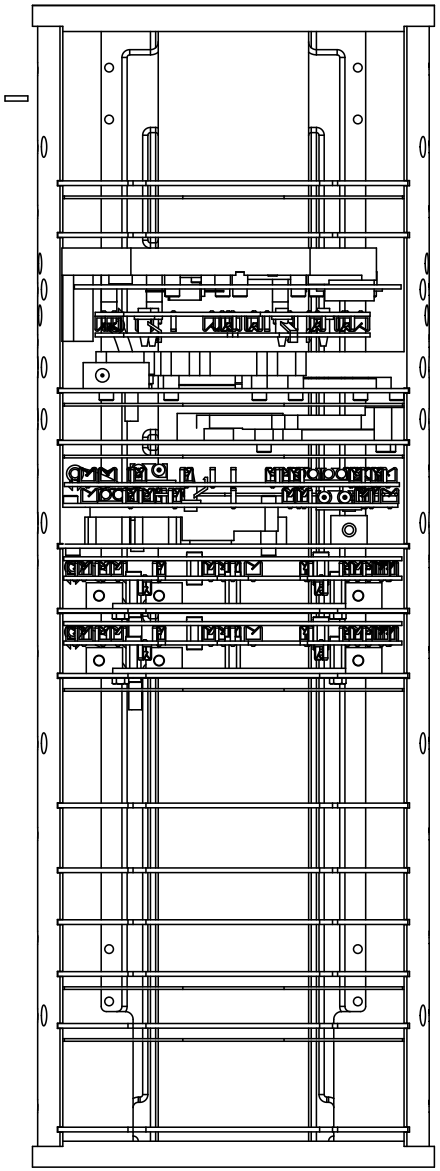

Isometric View

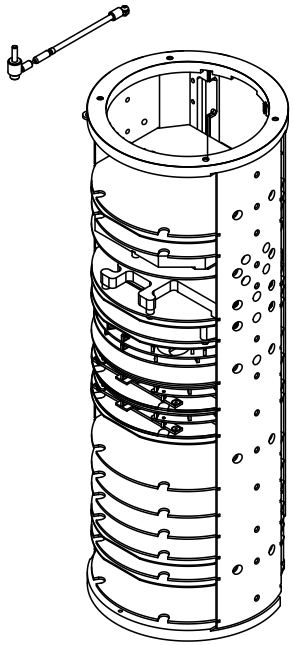

Top View

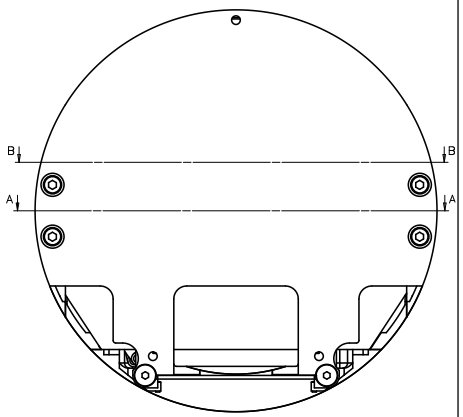

ITEM	QTY	NAME	Part #	Material	Norm	REV

Project: ANTARES

Title: SCM Crate Generale Assy

Revision		Date	Name
	C	12-okt-04	Lansbergen
	D	20-okt-04	Lansbergen
	E	17-12-04	Verlaat

Scale: 1:1	Drawn: Lansbergen		
Date: 02-feb-04	Checked:	Dim. in mm	
General tolerances unless otherwise stated according to ISO-2768-fH-E	Geometrical tolerances unless otherwise stated according to ISO-8015-E	Roughness unless otherwise stated according to ISO 1302	

NIKHEF
NATIONAL INSTITUTE FOR NUCLEAR PHYSICS AND HIGH ENERGY PHYSICS
P.O.41882,1009 DB Amsterdam,The Netherlands
Visitors: Kruislaan 409,1098 SJ,Amsterdam
tel:+31-(0)20-5922000
fax:+31-(0)20-5925155

Size: A1

Identification No.: ANA 37

Sheet No: 2 Number of sheets: 2

http://www.nikhef.nl/pub/departments/mt/projects/Antares/vLCAdesign.html