Section A-A

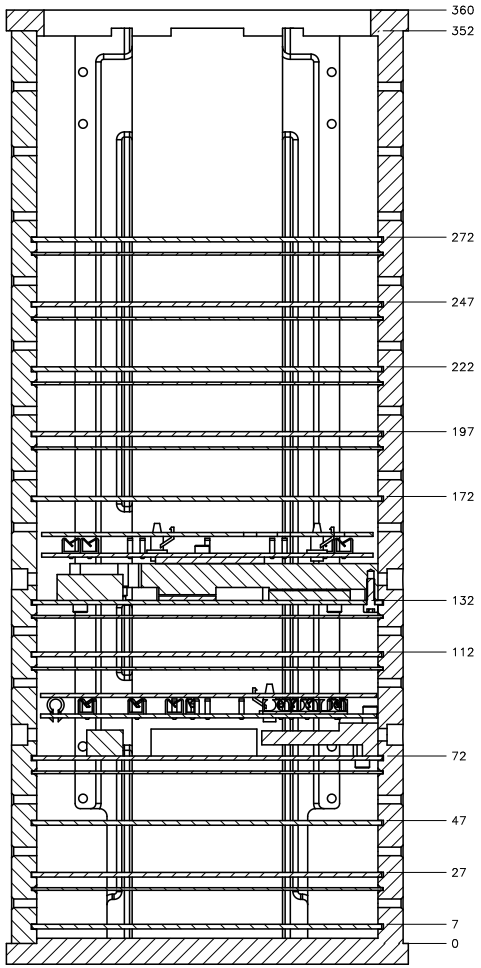

Section B-B

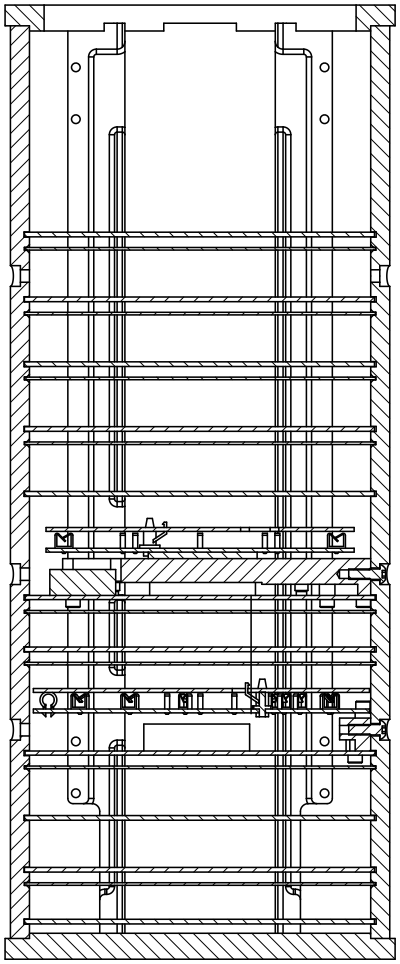

Front View

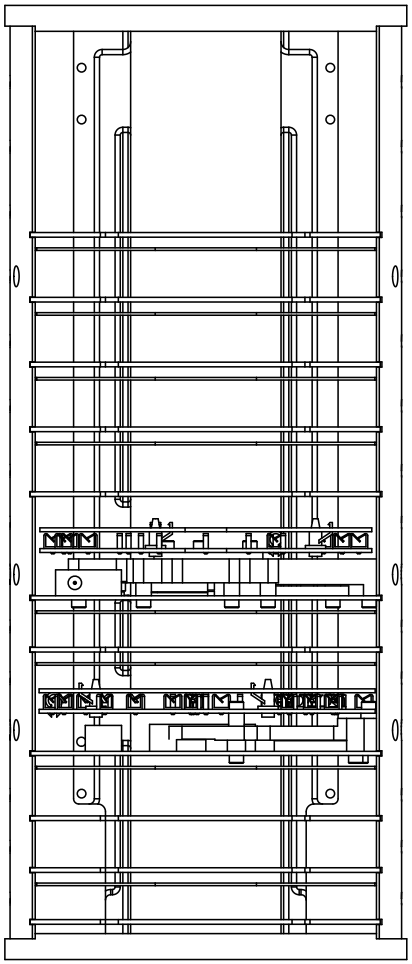

Isometric View

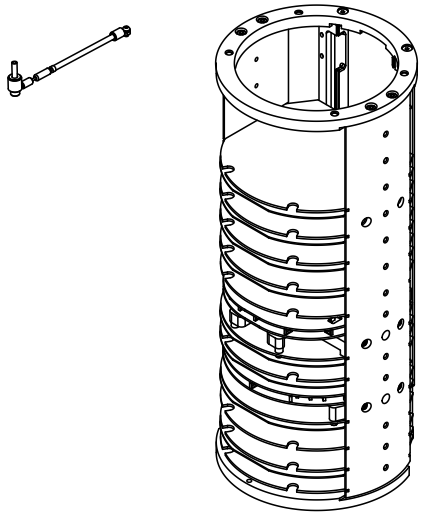

Top View

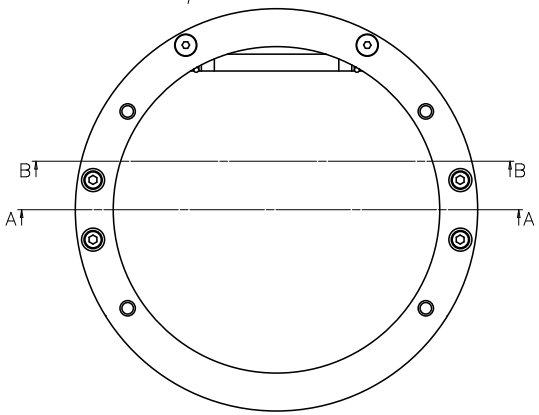

ITEM	QTY	NAME	Part #	Material	Norm	REV

Project: ANTARES

Title: LCM Crate General Assy

Revision		Date	Name
	B	24-jun-04	Lansbergen
	C	07-jul-04	Lansbergen
	F	17-12-04	Verlaat

General tolerances unless otherwise stated according to	Geometrical tolerances unless otherwise stated according to	Roughness unless otherwise stated according to
ISO-2768-fH-E	ISO-8015-E	ISO 1302

Scale: 1:1
Date: 03-feb-04
Drawn: lansbergen
Checked:
Dim. in mm

NIKHEF
NATIONAL INSTITUTE FOR NUCLEAR PHYSICS AND HIGH ENERGY PHYSICS
P.O.41882,1009 DB Amsterdam,The Netherlands
Visitors: Kruislaan 409,1098 SJ,Amsterdam
tel:+31-(0)20-5922000
fax:+31-(0)20-5925155

Size: A1
Identification No.: ANA 36
Sheet No: 2
Number of sheets: 2

http://www.nikhef.nl/pub/departments/mt/projects/Antares/LCMdesign.html