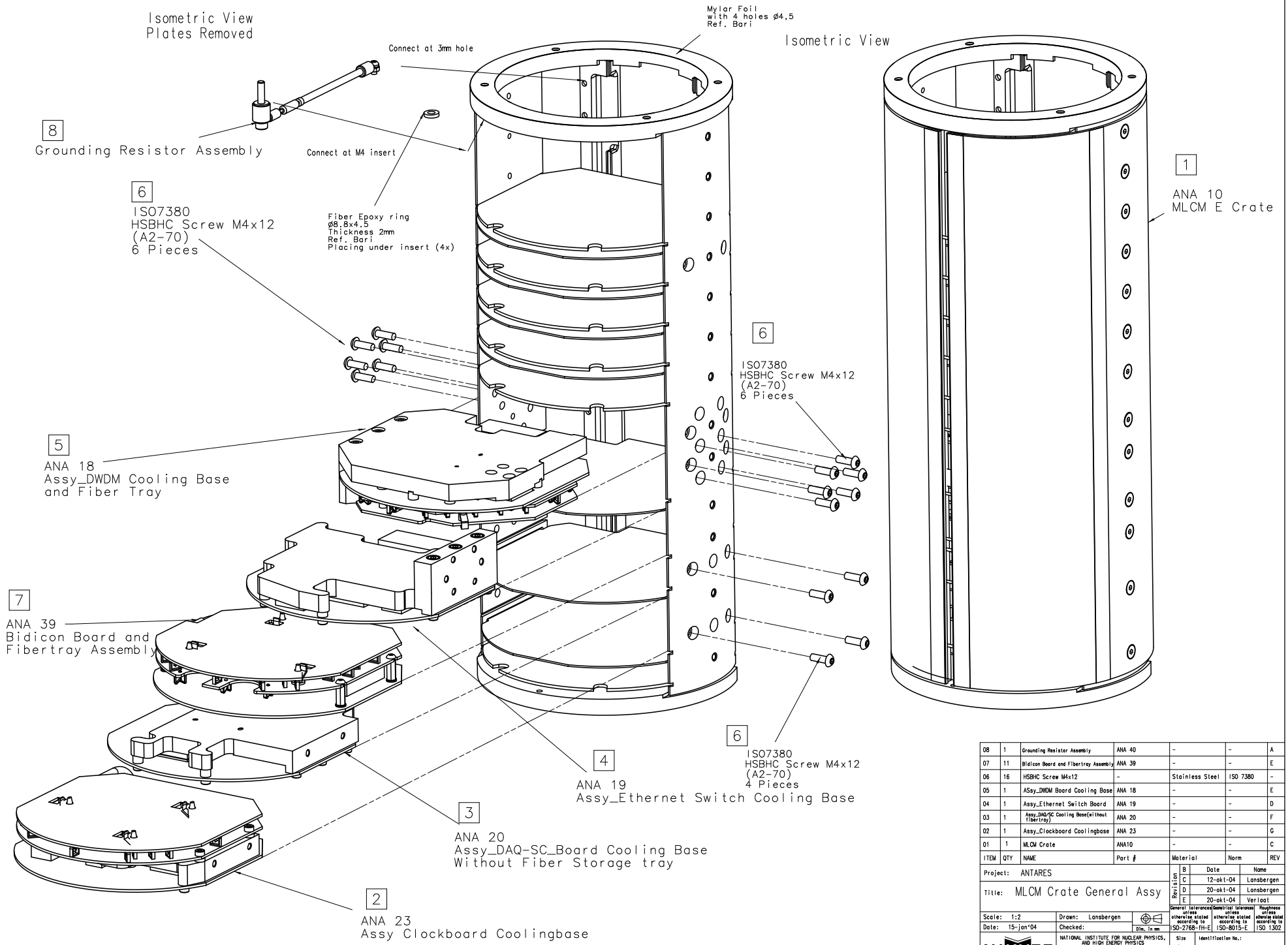

ITEM	QTY	NAME	Part #	Material	Norm	REV
08	1	Grounding Resistor Assembly	ANA 40	-	-	A
07	11	Bidicon Board and Fibertray Assembly	ANA 39	-	-	E
06	16	HSBHC Screw M4x12	-	Stainless Steel	ISO 7380	-
05	1	ASsy_DWDM Board Cooling Base	ANA 18	-	-	E
04	1	Assy_Ethernet Switch Board	ANA 19	-	-	D
03	1	Assy_DAQ/SC Cooling Base(without fibertray)	ANA 20	-	-	F
02	1	Assy_Clockboard Coolingbase	ANA 23	-	-	G
01	1	MLCM Crate	ANA10	-	-	C

Project: ANTARES

Title: MLCM Crate General Assy

Revision	Date	Name
B		
C	12-okt-04	Lansbergen
D	20-okt-04	Lansbergen
E	20-okt-04	Verlaat

Scale: 1:2 | Drawn: Lansbergen | Dim. in mm

Date: 15-jan'04 | Checked:

General tolerances unless otherwise stated according to ISO-2768-fH-E | Geometrical tolerances unless otherwise stated according to ISO-8015-E | Roughness unless otherwise stated according to ISO 1302

NIKHEF
NATIONAL INSTITUTE FOR NUCLEAR PHYSICS AND HIGH ENERGY PHYSICS
P.O.41882,1009 DB Amsterdam,The Netherlands
Visitors: Kruislaan 409,1098 SJ,Amsterdam
tel:+31-(0)20-5922000
fax:+31-(0)20-5925155

Size: A1 | Identification No.: ANA35

Sheet No: 1 | Number of sheets: 2

http://www.nikhef.nl/pub/departments/mt/projects/Antares/vLCMdesign.html