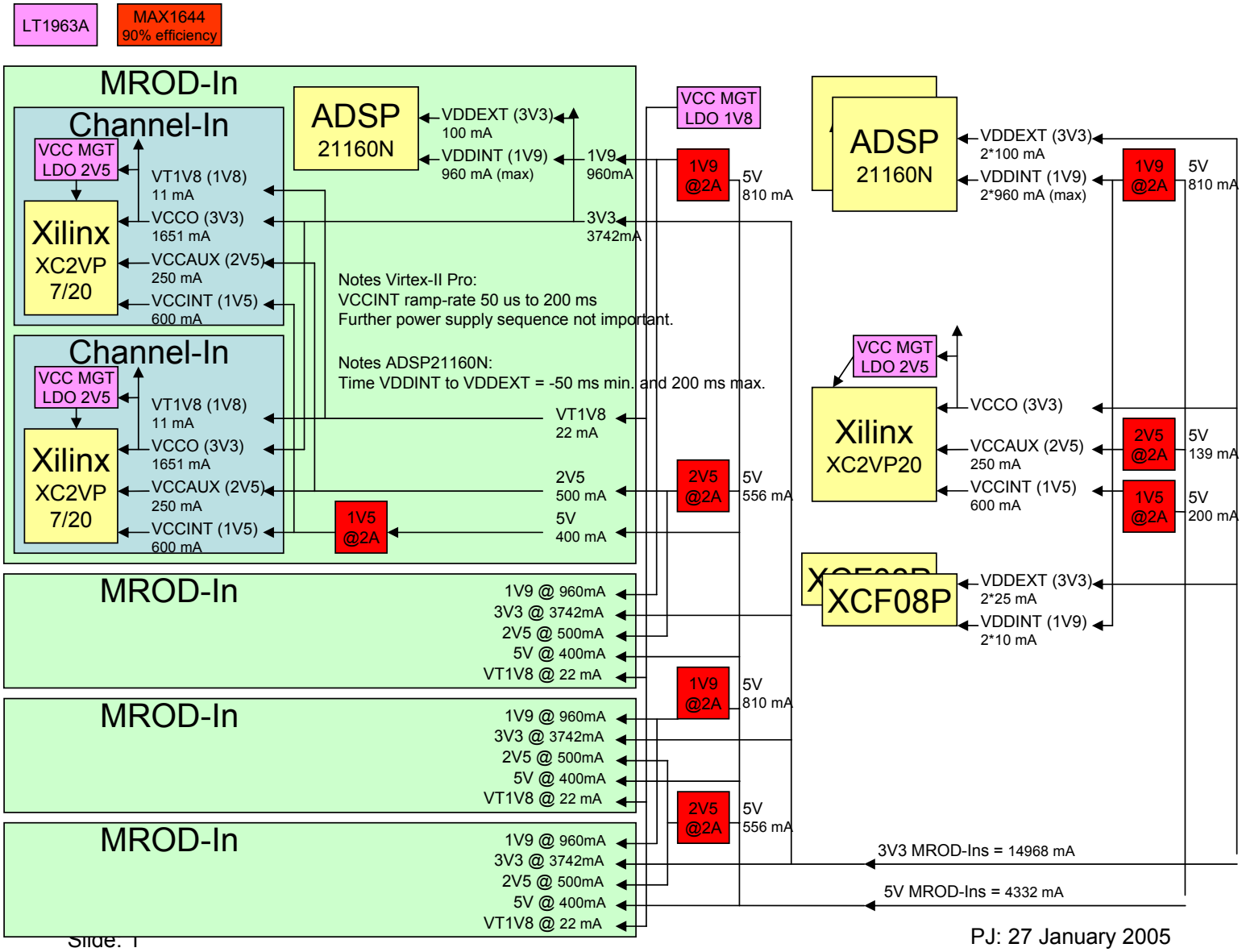

PJ: 27 January 2005