XC2VP7/20 VCCINT Decoupling Capacitors
Min. Power-On Current XC2VP20
IccINT = 600 mA

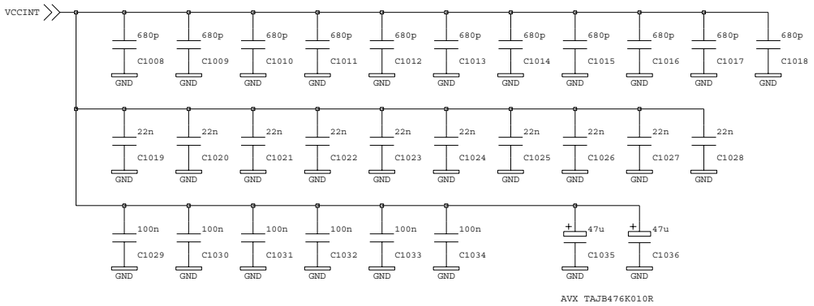

XC2VP7/20 VCCAUX Decoupling Capacitors
Min. Power-On Current XC2VP20
IccAUX = 250 mA (min)

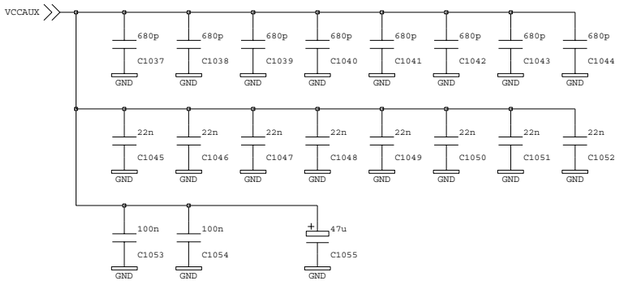

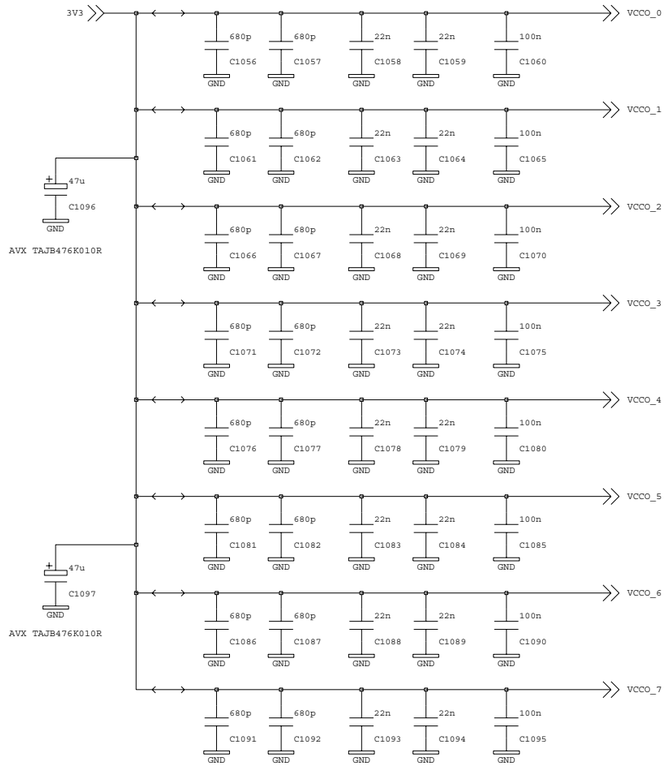

Power Inputs
For Xilinx Virtex-II Pro, power supplies
can be turned on in any sequence.

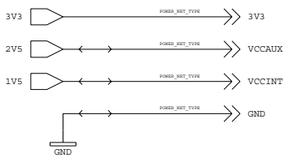

VCCAUX and VCCO can ramp up at any rate

VCCINT Ramp rate 200 us min. and 50 ms max.

All GND nets on the FPGA need
to be connected to golbal GROUND.

channel_in		Rev V2 2
		Date 7 Feb 2006
Input FPGA Power Supply Decoupling		Time 1:51:34 pm
Proj: MROD-X	Proj.No: 38405	Name Ton van Reen
Peter Jansweijer	peterj@nikhef.nl	
NIKHEF	NATIONAAL INSTITUUT VOOR KERN-FYSICA EN HOGE ENERGIE-FYSICA KRUISLAAN 409, 020-592 2000 1098 SJ AMSTERDAM NEDERLAND	Size A3 4 1 4 A
© ET-Nikhef Amsterdam		Dim 420 x 297 mm
		Page 3 of 6