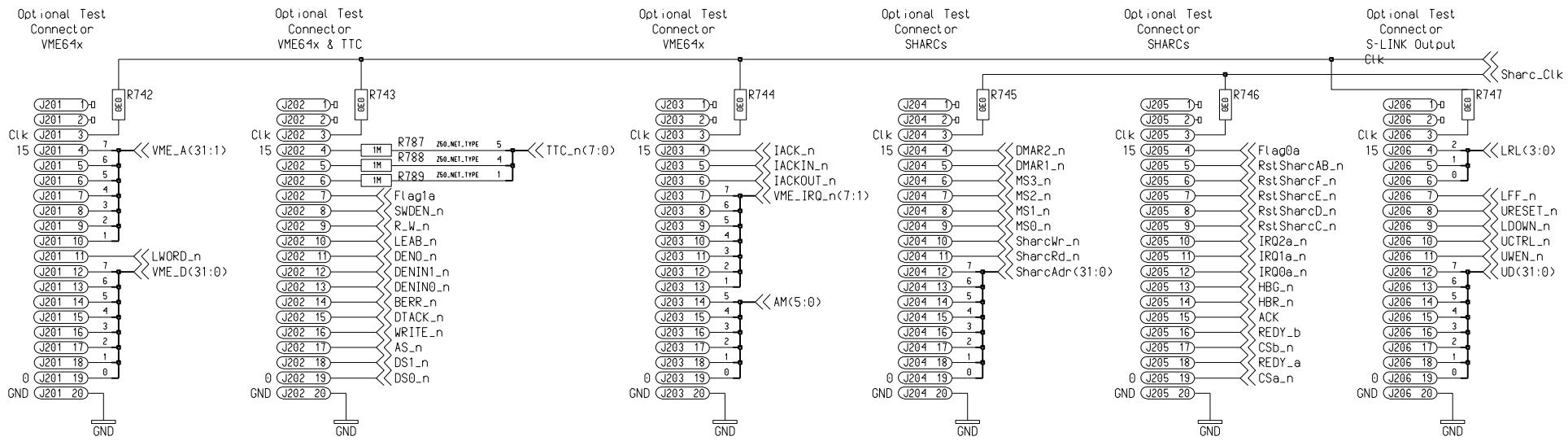

The 0 ohm resistors in the clock lines can be removed when the test connector is not used. This avoids long stubs on the clock lines. Note that the resistors should be placed near the clock source!

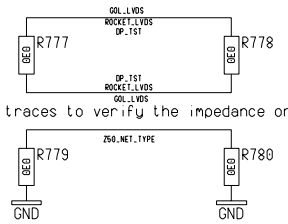

Some test traces to verify the impedance on the board.

MROD-Out		Rev 13
		Date 26 Jan 2005
Test connectors		Time 12:07:18 pm
Proj: MROD-X	Proj.No:38405	Name peterj
Peter Jansweijer	peterj@nikhef.nl	
NIKHEF ©ET-Nikhef Amsterdam	NATIONAAL INSTITUUT VOOR KERN-FYSICA EN HOGE ENERGIE-FYSICA KRUISLAAN 409, 020-592 2000 1098 SJ AMSTERDAM NEDERLAND	Size A3 4 1 4 A
		Dim 420 x 297 mm
		Page 19 of 19